TECHNICAL

PROPOSAL

شرکت پتروشیمی کارون

KAROON Petrochemical Co.

Project	**N2 Package (Compressor)**
For	**Karoon Petrochemical Company**
Service	**Reciprocating Compressor**
Item Number	**72711A/B**
Revision	**01**
Date	**September 21,2025**

C.S.T

کمپرسور سازی تبریز

Dear Madam and Sir,

With reference to your enquiry, we are pleased to submit our quotation of CST´s reciprocating compressor. Please see our comments in the proposal.
We are looking forward to cooperate with you during this project. If there are any questions, don't hesitate to contact us.

CST Sales Manager

RECIPROCATING COMPRESSOR DATA SHEET

DOC. NO.		REV. 0
PAGE NO.	1 OF 3	

1	CUSTOMER									M/O NO.	-		
2	PJT. NAME									PREPARED BY :	KIM		
3	PJT NO.			ITEM NO.	72711A/B					REVIEWED BY :	CHOI		
4	SERVICE	N2 COMPRESSOR								REVIEWED BY :	-		
5	NO. REQ'D	WORKING	4	STAND-BY	0	TOTAL	4			APPROVED BY :	Y.T LEE		
6	**OPERATION CONDITIONS**												
7	NO. OF STAGE(S)			ONE(1)									
8	GAS HANDLED	(VOL. %)		N2 100%									
9	BAROMETRIC PRESSURE	(mmHg)		760									
10	CAPACITY (DRY) (WET)	(kg/hr)		**93.75 (MFR. RATED CAPACITY = 93.75 / 0.97 = 96.65)**									
11	(DRY) (WET)	(Nm^3/hr)		**75.0 (MFR. RATED CAPACITY = 75.0 / 0.97 = 77.32)**									
12	INLET VOLUME	(Am^3/hr)		**16.86 (MFR. RATED CAPACITY = 16.86 / 0.97 = 17.38)**									
13	**SUCTION CONDITIONS**												
14	STAGE			1st							S.V SET PRESS.		
15	PRESSURE (CYL. INLET)	bar	A	5.00									
16	TEMPERATURE	(℃)		30									
17	RELATIVE HUMIDITY	(%)		0									
18	MOLECULAR WEIGHT	(Kg/Kmol)		28.000									
19	Cp/Cv	(K1)		1.400									
20	COMPRESSIBILITY	(Zs)		1.0000									
21	**DISCHARGE CONDITIONS**												
22	PRESSURE(PUL. OUTLET)	bar	A	17.00							18.7		
23	TEMPERATURE (ADIABATIC)	(℃)		156.8									
24	TEMPERATURE (ADIABATIC)	(℃)		145.0									
25	Cp/Cv	(K2)		1.400									
26	COMPRESSIBILITY	(Zd)		1.000									
27	INTER STAGE PRESS. DROP	bar		-									
28	COMPRESSION RATIO	(Rc)		3.4									
29	BHP OF EACH STAGE	(kw)		7.1									
30	TOTAL BHP	(kw)		7.3							7.9		
31	ROTATIONAL SPEED OF COMP'R (rpm)			400									
32	**OTHER CONDITIONS**												
33	COMP'R TYPE	☐ "I" TYPE	■ "Vetical" TYPE	☐ "Vee" TYPE	☐ "W" TYPE	☐ "B" TYPE							
34		■ NON-LUBRICATED	☐ LUBRICATED										
35		■ WATER COOLED	☐ AIR COOLED										
36	DRIVER	■ V-BELT	TYPE : C	PCS : 5	LENGTHS : C = (730 mm), 120 inch.								
37			COMP' PULLEY DIA. : 700 mm	MOTOR PULLEY DIA. : 155 mm.									
38		☐ DIRECT BY COUPLING : DISC TYPE	COUPLING DIA. : mm										
39	COMP'R ROTATION (view comp'r pulley side)	■ CW	☐ CCW										
40	ELECTRIC MOTOR SPEC.	TYPE	TEFC, IP54	MANUFACTURER	HYOSUNG or HHI or HIGEN								
41		SPEC.	15 kw	400 volts	3 phase	50 Hz	4 poles	1450 rpm					
42		STARTING METHOD	☐ STAR DELTA	■ D.O.L	☐ REACTOR								
43		INSULATION CLASS	☐ B	■ F / B	LOCATION	☐ INDOOR	■ OUTDOOR						
44	CAPACITY CONTROL	■ SUCTION VALVE UNLOADER : FINGER	■ ON AIR/POWER FAILURE : UNLOADED										
45		■ START-STOP	■ 2-STEP	☐ 3-STEP	☐ 5-STEP	■ BY-PASS CONTROL(0~100%)							
46		■ BY DISCHARGE PRESSURE	■ BY MANUFACTURE INSTRUMENT	☐									
47	COMP'R LOCATION	☐ INDOOR	■ OUTDOOR	■ UNDER ROOF									
48	ELECTRIC AREA	☐ HAZARDOUS	■ NON-HAZARDOUS	☐									
49	CONTROL POWER	■ AC	220 volts	1 phase	50 Hz								
50	PAINTING COLOR (Munsell No.)	■ REFER TO SPEC.	☐										
51	APPLICABLE CODE	■ MANUFACTURER'S STANDARD	■ KS	■ ANSI,ASME, API618 & MFR. STD.									
52	REMARKS :												
53													
54													
55													

RECIPROCATING COMPRESSOR DATA SHEET

DOC. NO.			0
PAGE NO.	2	OF	3

1	CUSTOMER		SERIAL NO.	
2	PJT. NAME		ITEM NO.	72711A/B
3	SERVICE	N2 COMPRESSOR		

4	**CYLINDER DATA**				
5	STAGE	1ST			
6	NO. OF CYLINDER PER STAGE	ONE(1)			
7	SINGLE / DOUBLE ACTING	DOUBLE			
8	CYLINDER LINER YES / NO	NO			
9	CYLINDER LINER WET / DRY	-			
10	OUTSIDE DIA. LINER (mm)	-			
11	BORE (mm)	90			
12	STROKE (mm)	100			
13	PISTON DISPLACEMENT (m^3/hr)	27.52			
14	VOLUMETRIC EFFICIENCY (%) AVE.	65.00			
15	NO. OF PISTON RING PER STAGE	4EA			
16	NO. OF RIDER RING PER STAGE	2EA			
17	NO. OF SUC. / DIS. VALVE PER STAGE	2EA/2EA			
18	TYPE OF VALVES	RING PLATE			
19	PISTON SPEED (m/s)	1.333			
20	ROD DIAMETER (mm)	40			
21	ROD LOAD-C (kg)				
22	ROD LOAD-T (kg)				
23	DESIGN TEMP. (℃)	200			
24	DESIGN PRESS. bar A	18.70			
25	HYDRO. TEST PRESS. bar A	28.05			
26	SUCTION FLANGE SIZE	1-1/2"			
27	RATING / FACING	ANSI300LB / R.F			
28	DISCHARGE FLANGE SIZE	1"			
29	RATING / FACING	ANSI300LB / R.F			
30	TYPE OF MAIN BEARING	■ SPHERICAL ROLLER BEARING			

31	**COMPRESSOR MATERIALS**			
32	CYLINDER (S)	CAST IRON	VALVE SEAT (S)	SS304
33	CYLINDER LINER (S)	-	VALVE PLATE (S)	STS420 J2
34	PISTON (S)	ALUMINUM	VALVE SPRING (S)	STS420 J2
35	PISTON RING (S)	PTFE	CRANK SHAFT	FORGED STEEL
36	RIDER RING (S)	PTFE	CROSS HEAD (S)	CAST IRON
37	PISTON ROD (S)	FORGED STEEL + Cr. COATING	CRANK CASE	CAST IRON

38	COMP'R PACKING	■ NON-LUBRICATED	☐ LUBRICATED		
39		■ SELF COOLED	☐ WATER COOLED		
40		■ PTFE	☐ BRONZE	☐ CARBON	☐ METALLIC
41	DISTANCE PIECE	■ STANDARD	■ EXTRA LONG SINGLE COMPARTMENT	☐ TWO COMPARTMENT ("D" TYPE)	
42	LUBRICATION	■ SPLASH SYSTEM			
43		☐ PRESS. SYSTEM	OIL PUMP DRIVEN		
44			☐ COMP'R SHAFT FOR MAIN PUMP		
45			☐ ELECTRIC MOTOR FOR AUX. PUMP		
46			☐ MANUAL FOR START		
47		CRANK CASE OIL CAPACITY	25 (ℓ)	☐	
48		■ ELECTRIC HEATER (W/THERMOSTART)		☐ STEAM	
49	WEIGHT	COMP'R : 1500 KG	DRIVER : 500 KG	MAX. MAINTENANCE : 500 KG	
50	SPACE REQUIREMENTS	L : 2100 MM W : 1500 MM H : 2100 MM		ROD REMOVAL DISTANCE : 1000 MM	
51	REMARKS				
52					
53					
54					
55					

RECIPROCATING COMPRESSOR DATA SHEET

DOC. NO.	0
PAGE NO.	3 OF 3

1	CUSTOMER		SERIAL NO.	
2	PJT. NAME		ITEM NO.	72711A/B
3	SERVICE	N2 COMPRESSOR		

ACCESSORIES

■ SNUBBER
TYPE ■ VOLUME BOTTLES ■ MAT'L : C.S
Q'TY: ■ SUCTION ■ DISCHARGE
8 ■ EACH STAGE

■ SUCTION TEMPORARY FILTER
TYPE ■ 100MESH ☐ OIL BATH
SIZE ■ 1 1/2"
LOCATION ☐ INDOOR ■ OUTDOOR
Q'TY: 4 SETS

■ UNLOADER SYSTEM
■ PNEMATIC TYPE ☐ MANUAL TYPE
■ SOLENOID VALVE ■ FILTER & REGULATOR
■ CHECK VALVE

■ LUBRICATION
OIL FREE TYPE
■ CYLINDER PART ■
■ OIL LEVEL GAUGE
■ CRANK CASE PART ☐ OIL STRAINER
☐ INTER PIPING
☐ CHECK VALVE

☐ GAS BUFFER TANK
TYPE : ☐ HORIZONTAL
VOLUME : m^3
MAT'L :
SIZE (ID x L x TH'K) : X X
Q'TY :

☐ INTER COOLER
TYPE : Q'TY : SET(S)
SHELL DIA. : SHELL MAT'L :
TUBE SIZE (OD x L x TH'K) : X X
TUBE MAT'L : COPPER TUBE Q'TY : PCS

■ AFTER COOLER
TYPE : SHELL / TUBE Q'TY : 4
SHELL DIA. : 6" SHELL MAT'L : C.S
TUBE SIZE (OD x L x TH'K) : 15.88 X 500 X 1.24
TUBE MAT'L : COPPER TUBE Q'TY : 24 PCS

☐ OIL COOLER
TYPE : SHELL / TUBE Q'TY : 1SET(S)
SHELL DIA. : SHELL MAT'L :
TUBE SIZE (OD x L x TH'K) : X X
TUBE MAT'L : TUBE Q'TY : PCS

■ CHECK VALVE
TYPE ☐ LIFT ☐ DUO ■ RING PLATE
SIZE ■ 1"

■ BED
FOR ■ COMMON BED Q'TY : 4 SET(S)
■ MOTOR SLIDE BED Q'TY : 4 SET(S)

■ GUARD
FOR ■ V-BELT Q'TY : 4 SET(S)
☐ DIRECT COUPLING Q'TY : SET(S)

■ PROCESS & UTILITY PIPING
■ SUCTION ■ DISCHARGE
■ INSTRUMENT AIR ■ INTER PIPING
■ COOLING WATER (ON BED) ■ OIL

■ THE OTHERS ■ ANCHOR BOLT $ NUTS ■ COUNTER FLANGES ■ NAME PLATE

■ SAFETY VALVE

LOCATION	■ SUC. SNUBBER	■ AFTER COOLER		
SIZE	LATER	LATER		
SET POINT bar A	12.5	18.7		
Q'TY :	4	4		

WATER COOLER

SERVICE	COMP'R	INTER COOLER	AFTER COOLER	OIL COOLER	OTHER
Capacity (m3/hr)	0.10		0.30		
INLET TEMP. (℃)	40		40		
OUTLET TEMP. (℃)	50		50		
PRESSURE (bar A)	4.0		4.0		
TOTAL CAPACITY(m3/hr)	0.40				

ELECTRIC SERVICE

	kw	volts	phase	Hz	poles
MAIN DRIVER	15	400	3	50	4
AUX. OIL PUMP					
CONTROL	0.1	220	1	50	-
E/C HEATER	0.1	220	1	50	
LUBERICATOR MOTOR					
WATER PUMP					
W. HEATER					

ALARM & SHUT DOWN

■ SUCTION PRESS. LOW	■ ALARM	
■ DISCHARGE PRESS. HIHG	■ ALARM	
☐ LUBE OIL PRESSURE LOW	☐ ALARM	
■ DISCHARGE TEMP. HIGH	■ ALARM	
■ OVER LOAD	■ ALARM	■ SHUTDOWN
■ C.W FLOW LOW	■ ALARM	■ SHUTDOWN
■ DISCHARE PRESSURE H.H	■ ALARM	■ SHUTDOWN
■ DISCHARE TEMP. H.H	■ ALARM	■ SHUTDOWN

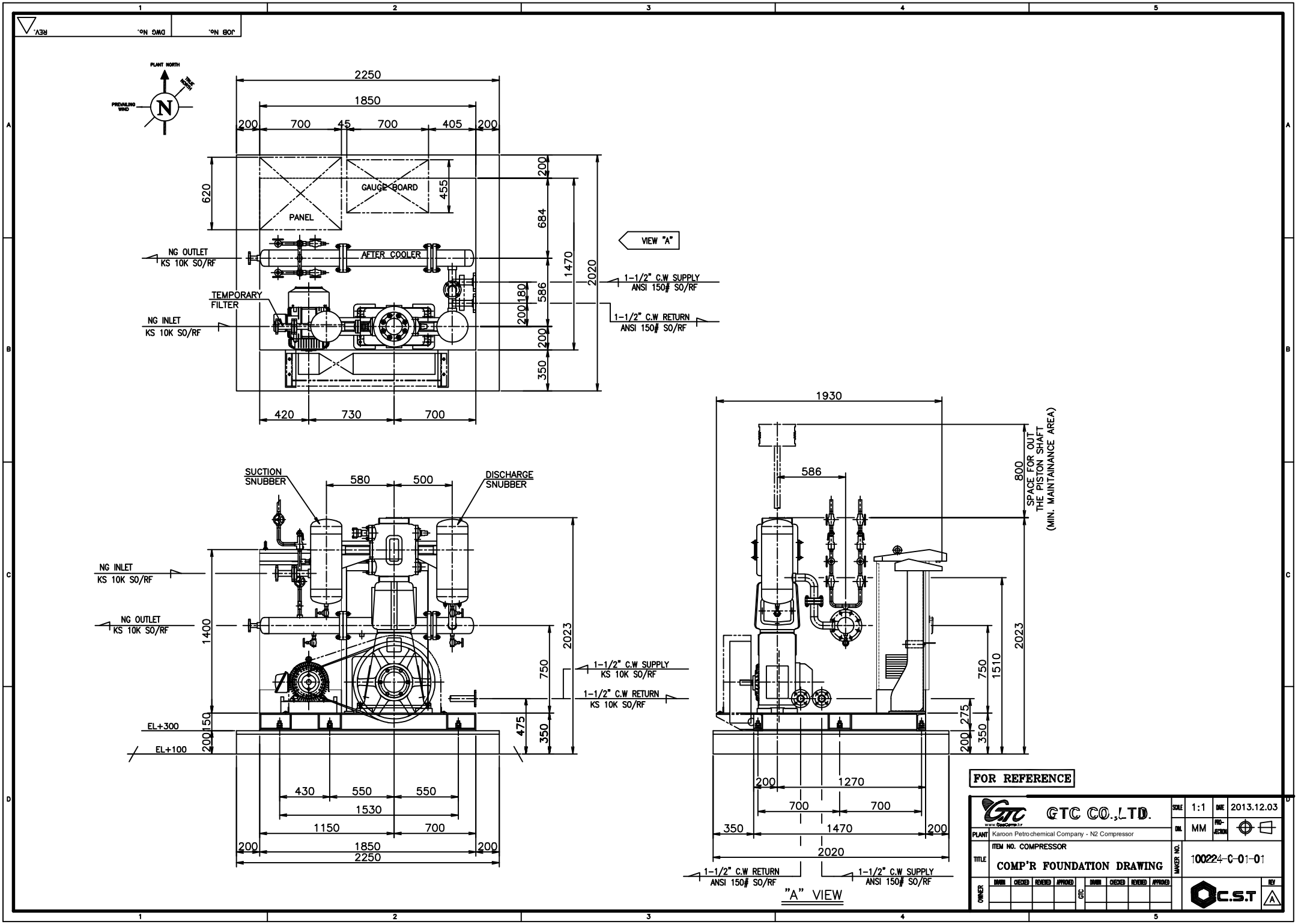
PLANT NORTH
PREVAILING WIND
N
2250
1850
200
700
45
700
405
200
620
GAUGE BOARD
455
PANEL
200
684
1470
2020
VIEW "A"
NG OUTLET
KS 10K SO/RF
AFTER COOLER
1-1/2" C.W SUPPLY
ANSI 150# SO/RF
TEMPORARY
FILTER
586
180
200
NG INLET
KS 10K SO/RF
1-1/2" C.W RETURN
ANSI 150# SO/RF
200
350
420
730
700
SUCTION
SNUBBER
580
500
DISCHARGE
SNUBBER
NG INLET
KS 10K SO/RF
NG OUTLET
KS 10K SO/RF
1400
2023
750
1-1/2" C.W SUPPLY
KS 10K SO/RF
1-1/2" C.W RETURN
KS 10K SO/RF
EL+300
150
200
EL+100
475
350
430
550
550
1530
1150
700
200
1850
200
2250
1930
586
800
SPACE FOR OUT
THE PISTON SHAFT
(MIN. MAINTAINANCE AREA)
750
1510
2023
275
350
200
200
1270
700
700
350
1470
200
2020
1-1/2" C.W RETURN
ANSI 150# SO/RF
1-1/2" C.W SUPPLY
ANSI 150# SO/RF
"A" VIEW
FOR REFERENCE
GTC CO.,LTD.
SCALE 1:1
DATE 2013.12.03
DIM. MM
PROJECTION
PLANT Karoon Petrochemical Company - N2 Compressor
ITEM NO. COMPRESSOR
TITLE COMP'R FOUNDATION DRAWING
MAKER NO. 100224-C-01-01
OWNER
DRAWN CHECKED REVIEWED APPROVED
GTC
C.S.T
REV A

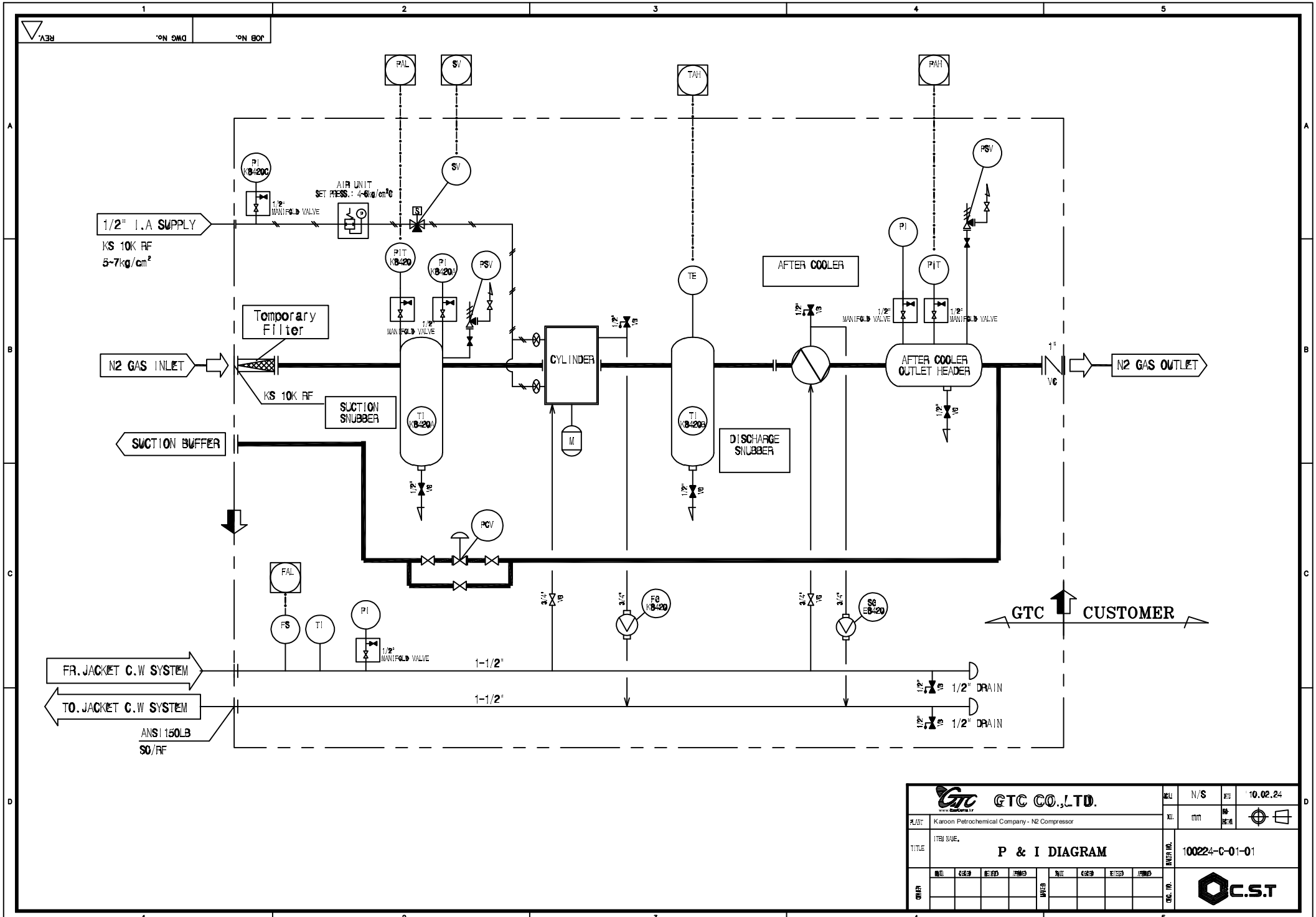
JOB No.
DWG No.
REV.
FAL
SV
TAH
FAH
PI KB-20C
AIR UNIT
SET PRESS.: 4~6kg/cm²G
1/2" MANIFOLD VALVE
1/2" I.A SUPPLY
KS 10K RF
5~7kg/cm²
PIT KB-20
PI KB-20A
PSV
TE
AFTER COOLER
PI
PIT
Temporary Filter
N2 GAS INLET
KS 10K RF
SUCTION SNUBBER
CYLINDER
M
TI KB-20A
TI KB-20B
DISCHARGE SNUBBER
AFTER COOLER OUTLET HEADER
1" VC
N2 GAS OUTLET
SUCTION BUFFER
PCV
FS
TI
FC KB-20
SC EB-20
GTC
CUSTOMER
FR.JACKET C.W SYSTEM
TO.JACKET C.W SYSTEM
1-1/2"
1/2" DRAIN
ANSI 150LB
SO/RF
GTC CO.,LTD.
SCALE N/S
DATE '10.02.24
UNIT mm
PLANT Karoon Petrochemical Company - N2 Compressor
TITLE ITEM NAME.
P & I DIAGRAM
DRAWING NO. 100224-C-01-01
DWG. NO.
C.S.T

ELECTRICAL LOAD LIST

C.S.T
کمپرسور سازی تبریز

PROJECT NAME : Karoon Petrochemical Company - N2 Package (Compressor)
INQUIRY NO. :
ITEM DESCRIPTION :

PAGE : 1 OF 1
DATE :
VENDOR : GTC Co.,Ltd.

Sr. No	Equipment No.	Equipment Description	Volt (V)	Rated Power (KW)	BHP (KW)	Q'ty per Unit			PF (%)	EFF. (%)	Remarks
						Continuous	Interm.	Stand-By			
1	72711A/B	Compressor motor	400	15	7.3	4			Later	Later	
2	72711A/B	Local Operating Panel	230	0.1		4					
3	72711A/B	Lub-oil heater	230	0.1			4				
4	72711A/B	MAIN C.W PUMP MOTOR	400	1.5	1.2	2			Later	Later	
5	72711A/B	AUX. C.W PUMP MOTOR	400	1.5	1.2			2	Later	Later	
6	72711A/B	AIR COOLER FAN MOTOR	400	1.5	1.2	2			Later	Later	

Notes :

1) Above electric loads are based on the one (1) set / Unit
2) BHP : Break Horse Power
3) Power Factor(PF) and Efficiency(EFF) shown on the above are estimated value. Actual PF & EFF. Shall be modified after receiving of vendor document.
4) The Essential Loads feeding the power from the Emergency Diesel Generator in case of normal power failure shall be indicated in the remarks column.

** Note: Vendor to fill up and submit the data for all electrical loads in attached “Electrical load list” format.

LUBRICANT LIST

Project No. : Karoon Petrochemical Company - N2 Package (Compressor)
Project Name : Karoon Petrochemical Company - N2 Compressor
Requisition No. :

Vendor :
Rev. No. : 0
Page : of

Item No.	No. of Set	Parts lubricated	Lubrication Method * Note 1	Lubricant Specification		Initial Charge Quantity per Set (Liter) * Note 2	Lubricant Change		Lubricant Make-up		Total Q'TY Required (Liter) * Note 2	Remark
				ISO Grade	Supplier & Brand recommended by Vendor		1st Change (Hrs)	Following Change (Hrs)	Interval (Hrs)	Annual Make-up Q'TY per Set (Liter) * Note 3		
72711A/B	4	LUBE-OIL	FLOODED	VG 100	MOBIL	25	500	4000	If required	If required	If required	

Notes :

1. Indicate the method of lubrication. (e.g. Grease, Flooded, Pure Oil Mist, Purge Oil Mist, Forced Lubrication, etc.)
2. 'g' (gram) shall be used for grease applications.
3. The estimated annual consumption or loss which requires make-up shall be specified. The amount of complete change shall not be included.

JOB No. :
JOB TITLE :
ITEM :

UTILITY CONSUMPTION LIST

C.S.T
کمپرسور سازی تبریز

PAGE :
DATE :
REV. : 0

ITEM NO.	ITEM DESCRIPTION	Q'TY	OPERATING MODE			COOLING WATER (M3/H)		PLANT WATER (KG/H)		POLISHED W (KG/H)		DRINKING W (KG/H)		INSTR. AIR (NM^3/H)		PLANT AIR (NM^3/H)		NITROGEN (NM^3/H)	
			C	I	S	C	I	C	I	C	I	C	I	C	I	C	I	C	I
72711A/B	N2 COMP	4	4											3					

LEGEND ; C : CONTINUOUS, I : INTERMITTENT, S : STAND BY, () : FOR 1 SET

SUB - VENDOR LIST

NO	EQUIPMENT	VENDOR LIST		REMARKS
		MANUFACTURE	ADDRESS	
1	COMPRESSOR ASS'Y	GTC CO., LTD.	KOREA	
2	LOCAL CONTROL SWTICH / JUNCTION BOX	NAMBUK E&C	KOREA	
3	SAFETY VALVE	JOKWANG I.L.I	KOREA	
4	PRESSURE & TEMPERATURE TRANSMITTER	AZBIL	JAPAN	
		YOKOGAWA, HONEYWELL	JAPAN	
		EMERSON, YOKOGAWA	JAPAN	
5	PRESS. DIFF. GAUGE	WISE	KOREA	
6	PRESSURE GAUGE TEMPERATURE GAUGE & ELEMENT	WISE	KOREA	
7	SOLENOID VALVE	ASCO(EMERSON)	KOREA	
8	LUBE. OIL ELECTRIC HEATER	DAELIM ELETCRIC HEATING.CO	KOREA	
9	SUCTION / DISCHARGE VAVLE	GTC CO., LTD.	KOREA	
10	PISTON RING / RIDER RING	GTC CO., LTD.	KOREA	
11	VALVE	DONGKANG METAL	KOREA	
		KPL	KOREA	
		WOOSUNG	KOREA	
12	MOTOR	HYUNDAI, HYOSUNG, HIGEN	KOREA	
13	VIBRATION SENSOR	METRIX, VIBRO-METER, GE	INTERNATIONAL	
14	PRESSURE CONTROL VALVE	FISHER, GE, AZBIL	INTERNATIONAL	
15	ELECTRIC EQUIPMENT	NAMBUK E&C, EATON	INTERNATIONAL	
16	PLC PANEL	SIEMENS, AB	INTERNATIONAL	
17	COUPLING	GTC CO., LTD.	KOREA	
18	BEARING	GTC CO., LTD.	KOREA	
19	PRESSURE VESSEL AND EXCHANGERS	GTC CO., LTD.	KOREA	
20	UNLOADER	GTC CO., LTD.	KOREA	
21	MAIN LUBE OIL PUMP	GTC CO., LTD.	KOREA	
22	AUX. LUBE OIL PUMP	SHINSHIN PUMP	KOREA	
23	LUBE OIL FILTER	WOOSUNG FLOWTEC	KOREA	
24	TCV	THERM OMEGA TECH	USA	

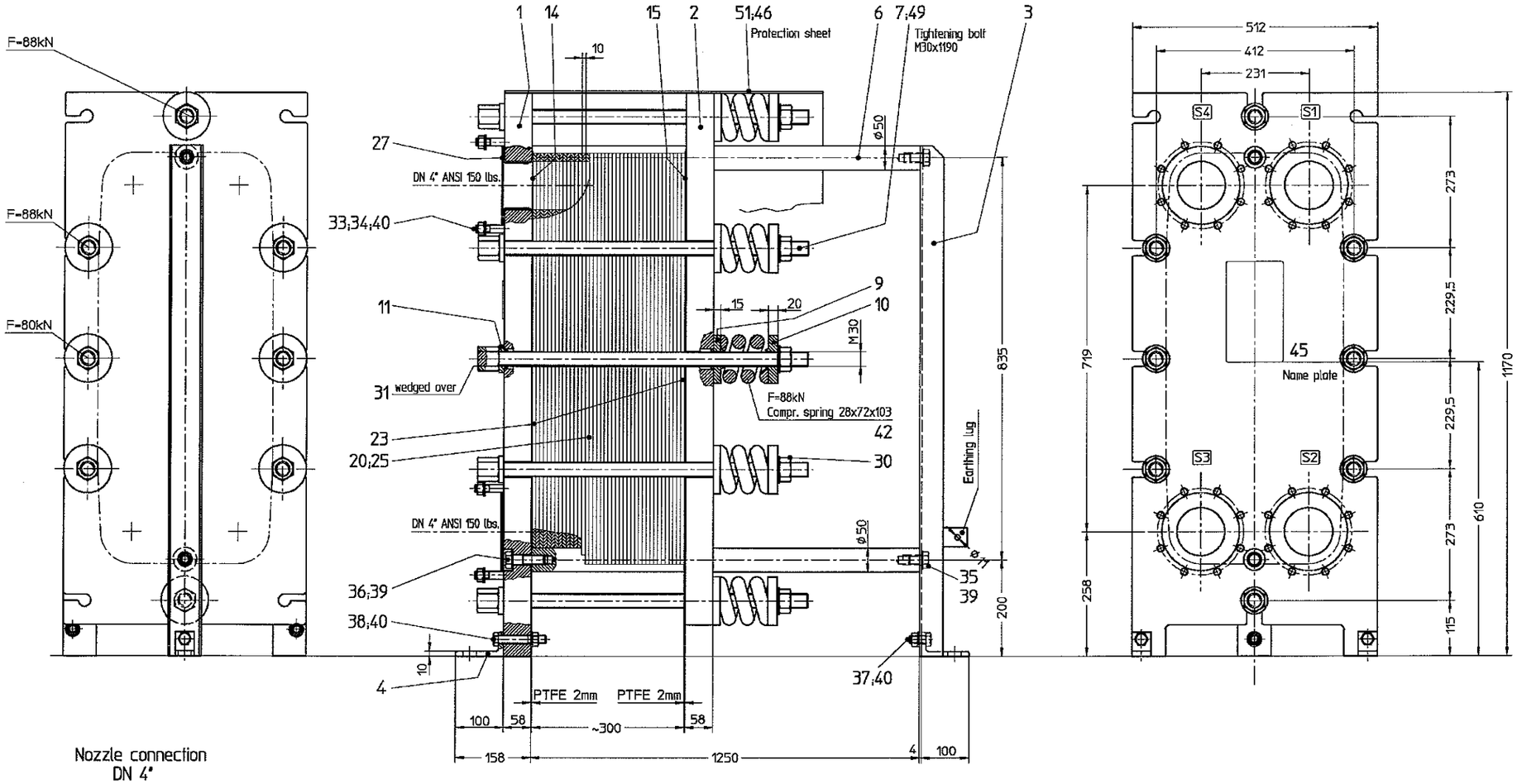

Nozzle connection
DN 4"

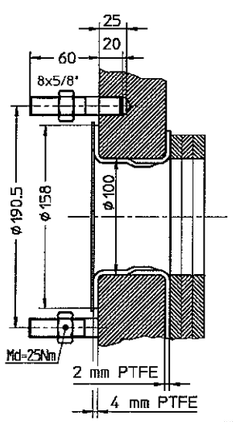

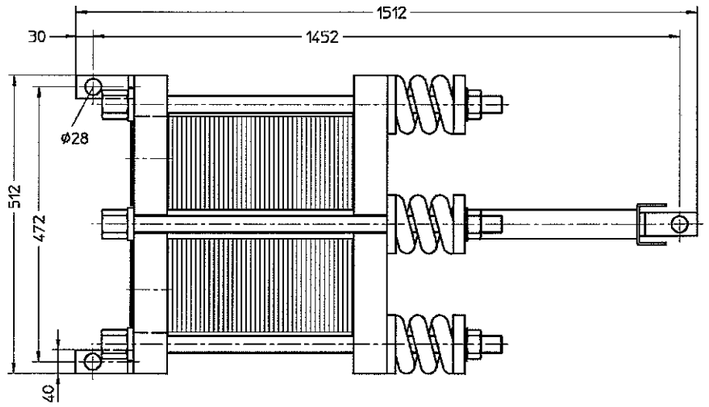

Nozzle stress:
Fx=Fy=Fz= 1500 N
Mx=My=Mz= 1800 Nm
Md= 23 Nm

Number of plates: 30
(29xP25 + 1xP25E)

Nozzle	Function	DN	Connection
S1	VENTH inlet	4"	ANSI 150
S2	VENTH outlet	4"	ANSI 150
S3	CWS inlet	4"	ANSI 150
S4	CWS outlet	4"	ANSI 150

Building in of plates seen in view direction A
1. Channel plate: Mark left side
(inflow area visible)
Further plates built in reciprocally
turned round 180 ° about axis Z
Last Channel plate turned round 180° about
axis X (inflow area invisible)
Turning plates are to be marked
at the closed place.

Flow sheet:

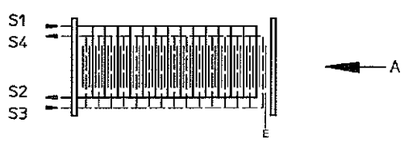

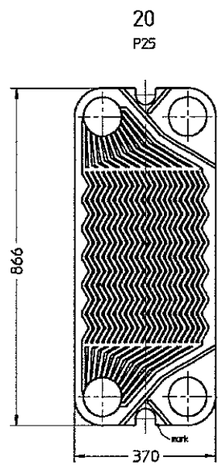

Job-No.	Year of construction	Job-No. Year of repair or replacement	Scope of supply remarks	Customer's specification
41024162/1	2007			

Alfa Laval Mid Europe GmbH, D-Glinde

Banda Iman, Iran
MDI Plant

Manufacturer	SGL CARBON GmbH	
Type	M10G-FLR	
Serial No.	41024162/1	
Year	2007	
Fluid group	1	1
Inlet → Outlet	S1 → S2	S3 → S4
Volume	8,4 L	9,0 L
Design press. PS	6,0 barg	6,0 barg
Design temp. TS	150 °C	150 °C
Test press. PT	7,8 barg	7,8 barg
Max. op. temp.	-	-
Test pressure date		
Item: E 22307		
Service	www.alfalaval.com	

WARNING
READ INSTRUCTION MANUAL BEFORE INSTALLATION, OPERATION AND MAINTENANCE TO AVOID INJURIES OR DAMAGE.

Assembly, testing, operating and maintenance according to Service Manual T02650.

Code: ASME Sec. VIII Div.1 (Edition 04, Addenda 2006)

Construction check by SGL CARBON
Hydrostatic pressure test by SGL CARBON / Lloyd´s / DNV
Exchange area 4.9 m²
Weight empty approx. 770 kg

Sandblasted to grade SA 2 1/2 in acc. with SS 05 59 00
Groung coat: Prining with two-component, metallic zinc rich epoxy primer zinc.
Interzinc 72, Thickness of coat: 40 ym (dry)
Finishing coat: Painting with two-component cxirxn ester.
Dumsoid 50, Thickness of coat: 120 ym (dry)
Colour RAL7038 Light Grey
Total Thickness: 160 ym (dry)

Material:

Channel plates P25-DIA-NS1 - Graphite
Lining of Frame- and Pressure plate: PTFE

Description	Material Grade	DIN/EN ASME	Certificates
Frame- Pressure plate	SA560-60		EN 10204- 3.1
Tightening bolts	SA193-B7		EN 10204- 3.2
Hexagonal nuts Item 30 and 31	SA194-2H-zp	6330 ISO4032	EN 10204- 3.1 stamped
Compression spring	51CrV4	10089	EN 10204- 3.1
Hex. bolts Hex. nuts Stud bolts incl. nuts (Item 33,34,40)	5.6 zp 5.6 zp A2 / A4	ISO4014 ISO4032 DIN 938 DIN 125 ISO4032	DIN 267 Bl.13 DIN-ISO 898 T1 bzw. 2 stamped
Carrying bar	1.4301 -TP304		
Centering dics, Washers, Supports	St-37 zp	10025	

Gaskets: for Channel plates: PTFE rope ø2
for Nozzles: SIGRAFLEX

02	ASME- text revised	09.07.2007	Schwarzbart	Schwarzbart
01	CE-Text removed	07.05.2007	Schwarzbart	Schwarzbart

Allgemeintoleranzen DIN ISO 2768 m c
Längenmaße
bis 3 ±0,1 ±0,2
bis 6 ±0,1 ±0,3
bis 30 ±0,2 ±0,5
bis 120 ±0,3 ±0,8
bis 400 ±0,5 ±1,2
bis 1000 ±0,8 ±2
bis 2000 ±1,2 ±3
bis 4000 ±2 ±4
Wkl.kurzer Schenkel
bis 10 ±1° ±1,5°
bis 50 ±30' ±1°
bis 120 ±20' ±30'
> 120 ±10' ±15'
Allgemeintoleranzen m

SGL GROUP THE CARBON COMPANY

Gezeichnet	Schwarzbart	25.04.2007	Ersetzt durch:
Geprüft	Schwarzbart	26.04.2007	Hierzu Z.-Nr.
Maßstab 1:5			

Plate Heat Exchanger
M10G-FLR P25-30-1.1-DIA-NS1

Stückliste Nr. 785865
Blatt 01 von 01 Rev. 02
Zeichnung-Nr. C0524548

7.2007 11:09 von: Schwarzbart
gepl. am

Chematur Engineering	Isocyanate Project, Phase 1 TDI Plant PROJECT 8010014-3 TDI PLANT Equipment Engineering Documen 4.3.1 Equipment Specification	Ref B 72427	Page No 1(1)
		Date Jan 30, 2006	Created/Rev by Evs/Btb
EQ. SPEC. -		Revision A/ Sep 15, 2006	Check / Appr

Item Name : **NITROGEN COMPRESSOR** Item No : **B72427** Qty: **1**

Type : **15t2X200-35**

Manufacturer : **Ingesoll & Rand**

Manufacturing No : **4001243**

PID : **7-24-02**

PFS : **7-24-02**

P.O. No : **20418**

Supplier : **GE2**

Building No: **703**

Weight: Empty: kg Operating: **406kg** Maximum: kg Weights are: ○ Preliminary ● Final

MEDIA DATA

Nitrogen (N2)

OPERATING DATA

Flow: max 60 nm3/h

Pressure head: 12 bar (5 to 17 bar a)

COPY

MATERIAL

Carbon Steel

EL. MOTOR

Power	kW	**15**	Protection	**IP54/55**
Voltage	V	**400**	EEx	
Frequenzy	Hz	**50**	Manufacturer	
Motor Speed	rpm	**15**	Size IEC-Std	

OTHER

Reciprocating compressor, air cooled on baseplate

MISCELLANEOUS DATA

INSULATION	○ Yes ● No	ANCHOR BOLT	○ Yes ● No
Type:	Thickness: mm	Type:	Dimension:
Support included:	○ Yes ○ No	Quantity:	Material:

ENCLOSURE

○ ○ ○ ○ Word Document

PARADOX :MEKSPECS:GENWMOT.FSL

Doc. No.: 0-703-DSH-ME-0039

204/5/M

PART	QUAN	NAME	MTL	DWG NO

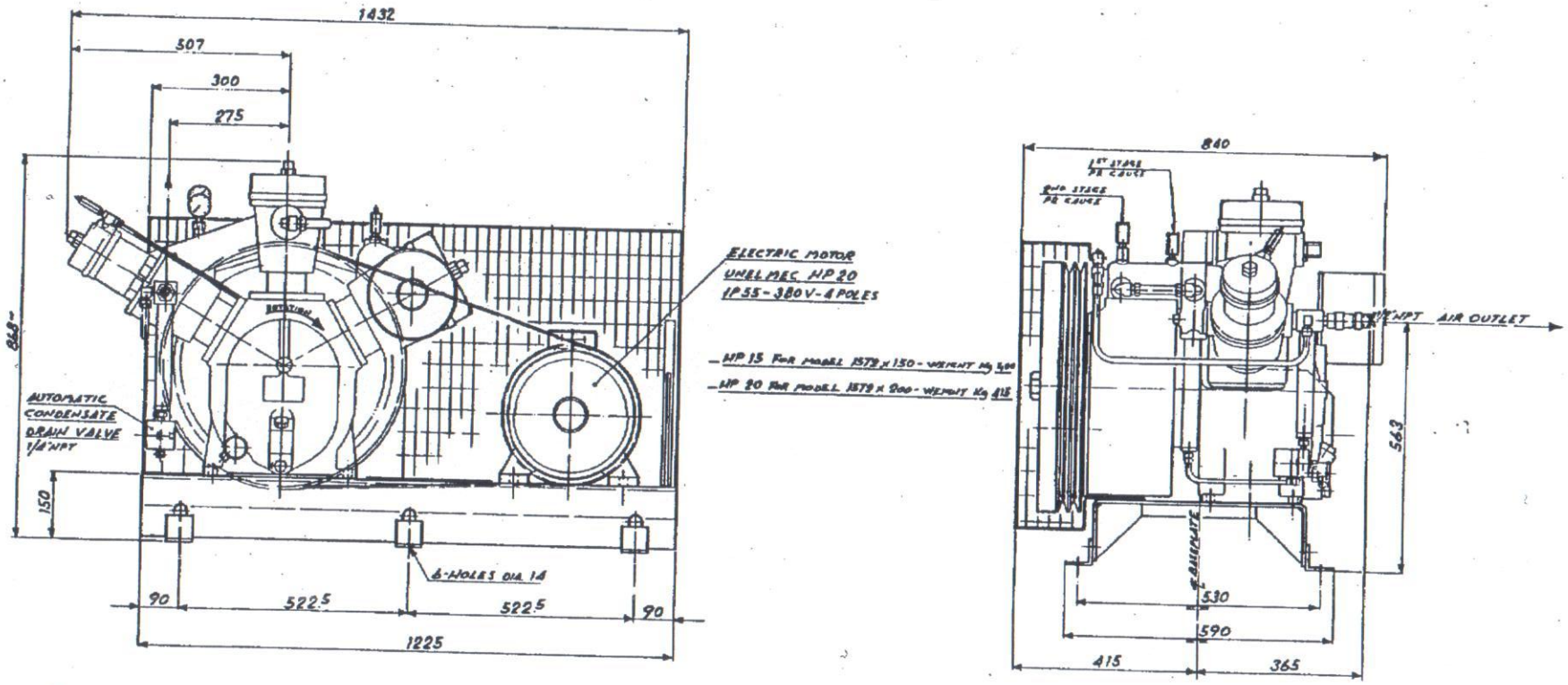

COPIA
NON CONTROLLATA

UNCONTROLLED
COPY

- DIMENSIONS ARE IN mm.

ZONE	REV	DATE	DESCRIPTION	DRAWN	CHECK	APPROV
—	3	13-2-97	CHANGE AIR WEIGHT FROM 380-405 TO 400-415			
—	2	29-11-96	WIDTH CHANGE FROM 780 TO 840; REMOVE FILTER DIMENSIONS REMARKS.			
1-3 4-6	1	18-11-96	ADDED WEIGHT AND DIMENSIONS ANTENTION			
—	0	31-1-96	NEW ISSUE			

GEOMETRIC SYMBOLS	
SYM	GEOMETRY
○	CYLINDRICITY
▱	FLATNESS
⊥	PERPENDICULARITY
//	PARALLELISM
◎	CONCENTRICITY
⊕	TRUE POSITION
↗	RUNOUT

PATTERN NO
MATERIAL
HEAT TREAT
HARDNESS
MAX.
MIN
WT

15T2 x 200
15T2 x 150

NOUN CODE
CONC
SCALE 1:5
DERIVED FROM

INGERSOLL-RAND

TITLE
GENERAL ARRANGEMENT
MODEL SYMBOL 15T2 x 200
15T2 x 150

SHEET 1 OF 1
DWG NO 7018
REV 3

204/416

Ingersoll-Rand

TECHNICAL DESCRIPTION

PACKAGED RECIPROCATING COMPRESSOR ON BASEPLATE
EURO 30 RANGE - HIGH PRESSURE DESIGN
MODEL 15T2X200-35

Main components:

Qty 1 T30 air compressor, model 15T2

reciprocating compressor, air-cooled, splash lubricated, belt driven, special high resistance cast iron construction, for industrial applications, with the following main characteristics:

- FRAME: cast iron, completely sealed to protect the lubrication crankcase, but easy to access through the big inspection cover;
- CRANKSHAFT: unique overhung design, supported by two heavy duty ball bearings;
- CONNECTING RODS: solid one-piece, easy-to-maintain design, feasible only with an overhung crankshaft; no alignment required due to precision ground crankpin bushings.
- CYLINDERS/HEADS: cast iron, separately cast, with radial cooling fins; individually bolted to the frame;
- PISTONS: precision balanced, 1st stage Aluminium alloy, 2nd and 3rd stage special cast iron, for better balance.
- VALVES: premium grade stainless steel; high efficiency due to the big sectional area of flow.
- LUBRICATION: the compressor is factory-filled with mineral oil; we recommend the use of All Season T30 lubricant at the first oil change-out, after having drained and flushed the crankcase from the break-in oil. This will enable you to run 2,000 hours of services between changes (instead of usual 500);

The scope of supply also includes the following components:

- cast iron fan-type flywheel pulley;
- centrifugal unloader to prevent cylinder from starting loaded;
- dry type 10μ inlet filter/silencer;
- two finned copper tube intercoolers provided with two safety valves and two pressure gauges;
- condensate separator on second interstage;
- finned tube aftercooler with condensate separator;
- drain leg at discharge for manual drainage of condensate from interstage and final separators;
- discharge safety valve, according to Ingersoll-Rand standards;

Ingersoll-Rand

Regulation: Automatic Start and Stop,
controlled by a pressure switch, supplied by I-R.

At the maximum required pressure the pressure switch stops the motor and the centrifugal unloader unloads the cylinders. When pressure falls below minimum set value, the motor is started and the compressor starts to work again.

This regulation is used if the compressor works in stand-by or when air demand is intermittent, and if the compressor was working with CSC regulation, it should run unloaded for long intervals.

Intermittent Duty Formula
The compressor is air cooled and operates at high pressure. Consequently pump-up times should not ordinarily exceed 30 minutes, or be less than 10 minutes. Shutdown periods between cycles of operation should be at least equal to the pump-up time. Note: when the compressor is regulated by constant speed control, the shut-down period is the time the compressor is operating unloaded.

Compressor characteristics and working conditions:

• number of stages		3
• number of cylinders		3
• rotation speed	rpm	950
• inlet pressure	atmospheric	
• piston displacement	l./min.	1471
• max. working pressure	bar.g	35
• free air delivery, at full load and at inlet conditions	l./min.	1120
• power absorbed at shaft, at full load, at max. working pressure	HP	17.4
• weight of bare compressor	kg.	242

N.1 Electric motor
asynchronous, three phase, 4 poles, TEFC, IP-55, class f insulation

- power	HP	20
- voltage	Volt	400
- frequency	Hz	50

N.1 Belt transmission
including:
- motor pulley
- series of V-belts
- metal beltguard, totally enclosed, in conformance to European Machines Directives.

N.1 Metal baseplate
common to compressor, motor and transmission.

204/5/8

Ingersoll-Rand

Compressor characteristics - package:

• discharge connection	threaded	1/2" NPT
• weight of package	kg.	406
• length	mm	1432
• width	mm	840
• height	mm	868
• noise level, measured at 1m. distance, according to CAGI PNEUROP	dB(A)	83
• standard paint colour	RAL	7037

OPTIONAL ACCESSORIES AVAILABLE ON REQUEST

- Low oil level switch (oil in the crankcase) - NEMA 4 (IP55)
- Automatic condensate drain system with check valve at air discharge
- Star Delta starter, completely wired, for wall mounting.
- Constant Speed Control Regulation
  with solenoid valve at inlet, 110v/50Hz, NEMA 1, and pressure switch.
  The compressor switches to unload service when receiver pressure reaches the pre-set unload pressure, and the absorbed power is reduced to about 1/5, with the motor always on.
  The air inlet opens and the compressor reloads when the receiver pressure reaches the pre-set load pressure.
- Glycerine pressure gauges.
- For more accessories and their description see Section SC1000 of the price book.

204/49

Ingersoll-Rand®

E2.8, E3, E4, E5, E6, E10

2340, 2475, 2545, 7100, 3000, 15T

231, 7T2, 7T4, 15T2, 223, 15T4, H15T4

23ANL, 235HNL, 5T2NL, 10T3NL

V235, V244, V255, 7V, 15V

OL5, OL10, OL15, OL25

OPERATION AND MAINTENANCE MANUAL

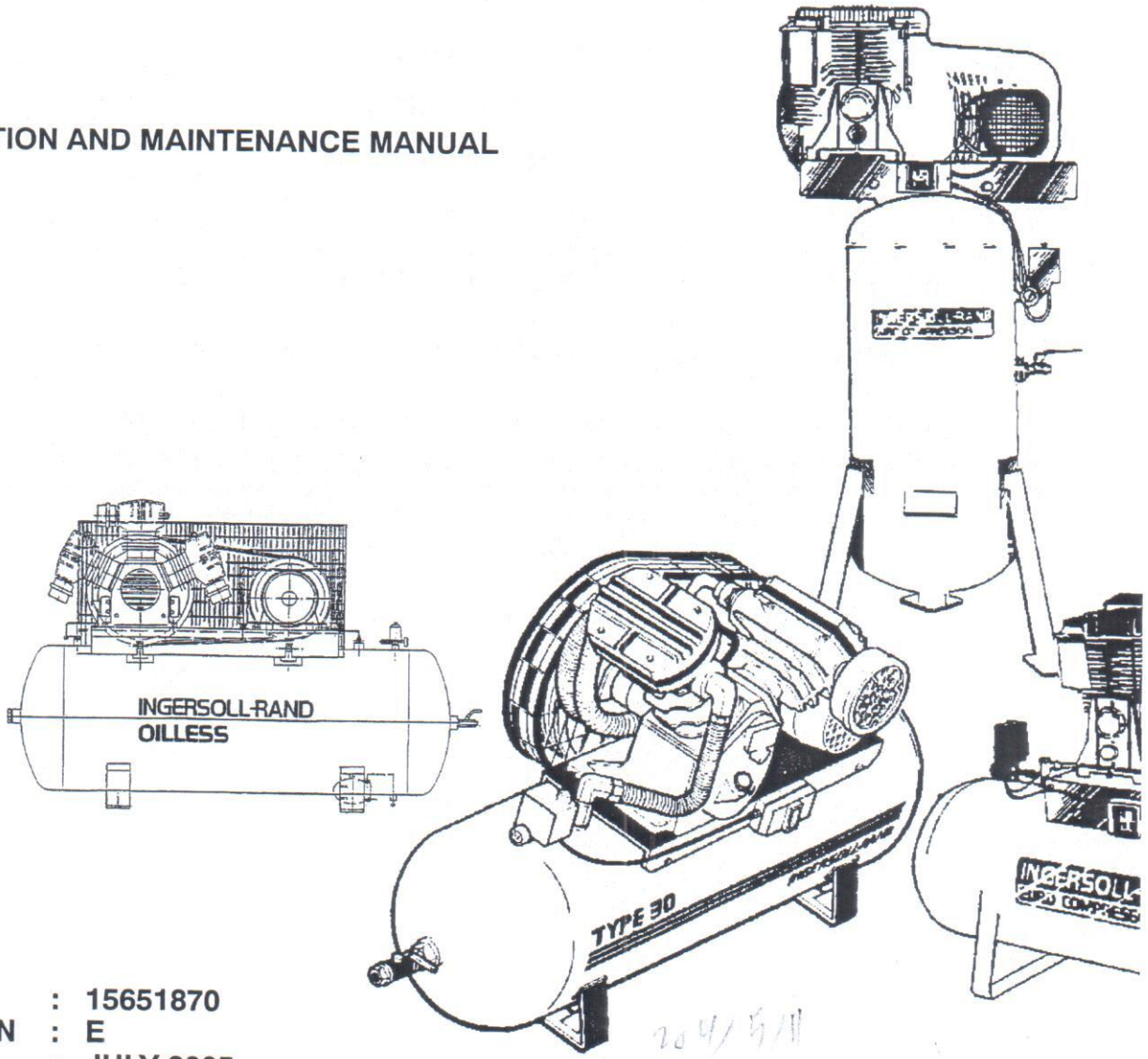

C.C.N.	:	15651870
REVISION	:	E
DATE	:	JULY 2005

Ingersoll-Rand

Supplement Sheet

Pressure Switches
Models 2340, 2475, 2545, 7100, 15T, 3000, 2000

This supplement sheet contains installation, maintenance and replacement parts information that has not yet been incorporated into the owner's manual and parts list for your air compressor. Please retain this information for reference.

ADJUSTING THE PRESSURE SWITCH SETTINGS

WARNING! **High voltage is present at the pressure switch contacts when the power supply is connected. Disconnect, lock and tag main power supply before making adjustments.**

CAUTION! **Do not adjust the pressure switch to exceed the maximum discharge pressure of the unit. Cut-off failure can occur by over adjusting the range nut.**

NOTE **Adjust the pressure switch only if adjustments are absolutely necessary.**

To properly adjust the range, follow the instructions below:

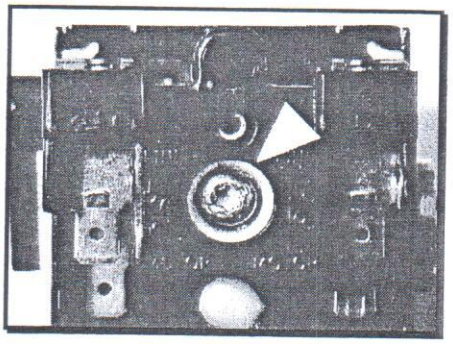

1. Remove the pressure switch cover.
2. Adjust the range by turning the range adjustment screw clockwise (in) to increase the cut-out point or counter-clockwise (out) to decrease the cut-out point.

NOTE: One full turn (360°) changes the setting approximately 6 PSIG.

3. Replace cover, reconnect power supply and start the compressor.
4. Note the pressure gauge reading at which the compressor cuts out.
5. Repeat adjustment procedure if necessary.

PRESSURE SWITCH INSTALLATION PRECAUTIONS

Diaphragm leaks can occur if a new pressure switch is installed improperly. During installation of a new pressure switch, do not tighten the pressure switch by turning the switch body by hand. Putting sideways pressure on the switch body puts stress on the body-to-diaphragm connection and may cause later failure due to vibration, temperature expansion, or pressure.

In addition, do not use the pressure switch assembly as a handle when moving the compressor. This places stress on the body-to-diaphragm connection and can distort internal components.

Failure can occur by putting undue stress on the unloader body while tightening the unloader tubing with a wrench. Do not adjust the orientation of the pressure switch by turning the entire assembly with a wrench placed on the unloader connection.

TYPICAL PRESSURE SWITCH SETTINGS

Minimum On	Maximum Off	Differential (Non-Adjustable)
100	175	30-40

Printed in U.S.A.

Form SCD-914
July 2000

Ingersoll-Rand

Instruction Sheet

Installation, Operation & Maintenance Instructions For Model EDV-2000 Electric Condensate Drains

PRODUCT DESCRIPTION

The EDV-2000 removes condensed water and oil from the air receiver tank. Additional drains may be installed throughout your compressed air system, including aftercoolers, filters, drip legs and dryers.

The EDV-2000 operates on a timer which can be set to automatically drain the air receiver tank at operator-determined intervals.

Key features include:

- 100% continuous duty
- NEMA 4 enclosure
- Adjustable time on (.5 - 10 seconds)
- Adjustable time off (.5 - 45 minutes)
- Stainless steel operator
- LED to indicate electrical power is on
- LED to indicate valve is open
- Manual override
- 6' power cord (AC plug on 110/220 volt drains only)
- Agency approval

RECEIPT & INSPECTION

Remove the EDV-2000 from packaging and inspect for transportation damage. Ensure the voltage rating on the solenoid valve matches your power supply.

INSTALLATION

On compressors that have been in service without an automatic drain, all debris at the bottom of the tank should be cleaned and blown out before installing the electric drain.

WARNING: DO NOT install the EDV-2000 on a pressurized tank. Depressurize the tank and disconnect the power supply before installing.

NOTE: For ease of installation, it may be necessary to elevate the tank. Ensure adequate lifting equipment is available.

1. Install EDV-2000 using proper sealant (i.e., Loctite 567) on the threads. Ensure sealant does not enter the valve body.
2. Supply EDV-2000 with the proper electrical supply voltage.

OPERATION

CAUTION: Do not operate the EDV-2000 outside the following pressure and temperature ranges:

Maximum Operating Pressure:	250 psig
Compressed Air Temperature:	33 to 265°F
Ambient Temperature:	33 to 125°F

1. Open the strainer ball valve.

Strainer Ball Valve.

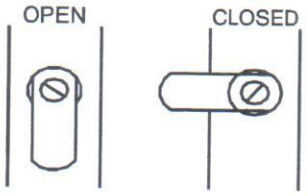

2. Set the "time off" and "time on" knobs. See TIMER SETTINGS (below) for an explanation of the settings.
3. During compressor operation, check for air leaks.

TIMER SETTINGS

The "time off" setting determines the interval between cycles from 30 seconds to 45 minutes. The "time on" setting determines the actual time the compressor drains condensate from the 1/4" or 1/2" condensate outlet port.

The timer's cycle rate and drain opening time should be adjusted to open just long enough to discharge the condensate. The timer is properly set when it opens and discharges condensate and then vents air for approximately one second before closing. Adjustments may be made depending on many factors, including humidity and duty cycle.

TROUBLESHOOTING

Trouble	Cause	Action
Valve will not close.	1. Debris in solenoid valve prevents diaphragm from seating.	1. Remove solenoid valve, disassemble, clean and reassemble.
	2. Short in electrical component.	2. Check and replace power cord or timer as needed.
Timer will not activate.	1. No electrical supply.	1. Apply power.
	2. Timer malfunction	2. Replace timer.
	3. Clogged port.	3. Clean valve.
	4. Solenoid valve malfunction.	4. Replace solenoid valve.
	5. Clogged strainer.	5. Clean strainer.

MAINTENANCE

NOTE: The following maintenance schedule has been developed for typical applications. Maintenance intervals should be shortened in harsher environments.

DRAIN VALVE MAINTENANCE SCHEDULE	
DAILY	Test the valve for proper operation. Clean the filter screen if needed.
MONTHLY (EVERY 30 DAYS)	Clean the filter screen.

To clean the filter screen, perform the following steps:

1. Close the strainer ball valve completely to isolate it from the air receiver tank.
2. Press the TEST button on the timer to vent the pressure remaining in the valve. Repeat until all pressure is removed.

   CAUTION! High pressure air can cause injury from flying debris. Ensure the strainer ball valve is completely closed and pressure is released from the valve prior to cleaning.
3. Remove the plug from the strainer with a suitable wrench. If you hear air escaping from the cleaning port, STOP IMMEDIATELY and repeat steps 1 and 2.
4. Remove the stainless steel filter screen and clean it. Remove any debris that may be in the strainer body before replacing the filter screen.
5. Replace plug and tighten with wrench.
6. When putting the EDV-2000 back into service, press the TEST button to confirm proper function.

Form SCD-879B
August 2002

INGERSOLL-RAND®
AIR COMPRESSORS

Supplement

Small Compressor Division **Ingersoll-Rand Company** **Campbellsville, KY 42718**

This form provides supplemental information for:

Pressure Switches

NOTICE

This supplement does not apply to optional pressure switches with a differential adjustment. These optional pressure switches can be provided at an additional cost.

PURPOSE

The purpose of this supplement is to provide updated information for the standard pressure switches provided on Ingersoll-Rand compressor packages.

The information contained in this supplement is not included in the literature provided with your compressor. Please keep this supplement for future reference.

PRESSURE SWITCH

Standard pressure switches provided on Ingersoll-Rand compressor packages are no longer equipped with a differential adjustment control to establish the span between cut-in and cut-out pressure levels. The span is factory set for 40 ± 4 PSIG and cannot be adjusted.

NOTICE

Some pressure switches are equipped with an on-off lever used to open and close the electrical contacts inside the switch. THIS LEVER IS NOT A DIFFERENTIAL ADJUSTMENT CONTROL. The pressure switches with the on-off lever do not have a differential adjustment control.

The range adjustment control is still provided to set the cut-in and cut-out pressure levels.

For additional information, refer to the instructions provided for the pressure switch.

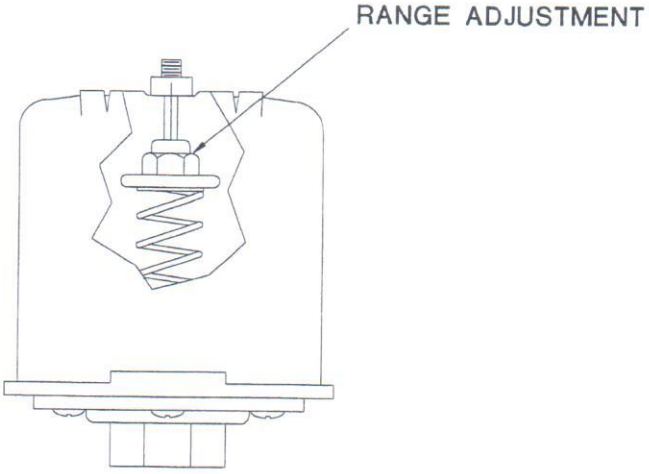

The pressure switch is equipped with a range adjustment control only. No differential adjustment controls are provided.

Form SCD-697
June 1996

SAFETY PRECAUTIONS ENCLOSED

DO NOT DESTROY

This manual contains important safety information and should be made available to all personnel who operate and/or maintain this product. Carefully read this manual before attempting to operate or perform maintenance.

PRECAUCIONES DE SEGUIRIDAD

NO DESTRUIR

Este manual contiene información importante y debe estar al alcance de todo el personal que opera y/o mantiene este producto. Lea cuidadosamente este manual antes de intentar operar o efectuar cualquier mantenimiento a este producto.

PARTS LIST

Model 15T2 Three-Stage High Pressure Industrial Air Compressor

INGERSOLL-RAND®

AIR COMPRESSORS

Refer all communications to the nearest Ingersoll-Rand Full Service Distributor.
Para cualquier consulta, contacte a su Distributor Ingersoll-Rand más cercano.

Form SCD-303A
May 1989

NOTICE

THE USE OF REPAIR PARTS OTHER THAN THOSE INCLUDED WITHIN THE INGERSOLL-RAND COMPANY APPROVED PARTS LIST MAY CREATE UNSAFE CONDITIONS OR MECHANICAL FAILURES OVER WHICH INGERSOLL-RAND COMPANY HAS NO CONTROL. INGERSOLL-RAND COMPANY SHALL BEAR NO RESPONSIBILITY FOR EQUIPMENT ON WHICH NON-APPROVED REPAIRS PARTS ARE INSTALLED.

The manufacturer reserves the right to make changes or add improvements without notice and without incurring any obligation to make such changes or add such improvements to products previously sold.

GLOSSARY

Group Assembly Parts List
Parts are listed in disassembly sequence, where applicable. Each assembly is broken down into subassemblies and detail parts which are idented with "bullet" (•) symbols in the DESCRIPTION column to indicate the relationship to the next higher assembly:

Assemblies and Detail Parts

- Attaching Parts for Assemblies and Detail Parts
- • Subassemblies
- • • Detail Parts for Subassemblies, etc.

Reference Number Column
The reference number is the number assigned to the part in the listing. The reference number corresponds to the item on the associated illustration. Where applicable, the following abbreviations might appear in this column:

NI — Not Illustrated.

REF — Reference Only. Refer to the figure and page noted in the description column.

Part Number Column
All numbers listed in this column are INGERSOLL-RAND part numbers, and must be specified when ordering replacement parts. The following abbreviations appear in this column:

NA — Not Applicable. This abbreviation indicates items which are not used on particular models or packages.

NSS — Not Sold Separately. These items must be ordered under the next higher assembly, or, where applicable, as part of a Step Saver Kit.

* — Consumable Materials (lubricants, sealants, etc.). Purchase directly from your local INGERSOLL-RAND Air Center or Full Service Distributor.

** — Part Number Varies. Specify the compressor bare speed and complete nameplate data when ordering.

Description Column
The description column indicates the item by standard name followed by modifiers. The modifiers identify specific characteristics (i.e. dimensions, capacity, pressure setting, etc.), and/or the particular location or function on the compressor. Always include the description when ordering replacement parts or kits.

Quantity Per Assembly Column
Quantities listed in this column reflect the number used in the next higher assembly, and are not necessarily the total quantity of the part used in the complete package. Specify the desired quantity when ordering replacement parts.

Recommended Spares Column
Quantities listed in this column reflect the number of each item which we recommend be kept on hand for maintenance or repair:

CLASS 1 — MINIMUM. Recommended quantity for Domestic Service where interruptions in service are not important.

CLASS 2 — AVERAGE. Recommended quantity for Domestic Service where interruptions in continuity of service are not objectionable.

CLASS 3 — MAXIMUM. Recommended quantity for International or Domestic Service where interruptions in service are not acceptable.

Step Saver Kits
Step Saver Kits are available for all compressor models. These kits are designed to provide all of the parts you will need to perform routine maintenance and repair tasks. A list of available Step Saver Kits is included in the Parts List manual which came with your compressor. When ordering Step Saver Kits, please follow the instructions set out below for ordering replacement parts.

ORDERING INSTRUCTIONS

All parts listed in the Part List manual for your compressor are available through your local INGERSOLL-RAND Air Center or Full Service Distributor. Consult the Directory of Distributors included with your compressor to locate the distributor in your area.

When ordering replacement parts or Step Saver Kits, please specify:

1. The MODEL and SERIAL NUMBER as stamped on the compressor nameplate.
2. The FORM NUMBER of the Parts List manual.
3. The QUANTITY, DESCRIPTION and PART NUMBER exactly as listed.

EXAMPLE

Send the following parts for model	7100
Serial Number	T30000000
Literature Form Number	SCD-478A
1 Switch, Pressure - NEMA 1	37005907
2 Element, Filter	32012957
1 Gauge, Pressure	32013872

NOTA

EL USO DE PARTES PARA REPARACION DIFERENTES A LAS INCLUIDAS EN LA LISTA DE PARTES APROBADA DE INGERSOLL-RAND PUEDE CREAR CONDICIONES INSEGURAS O FALLAS MECANICAS SOBRES LAS CUALES INGERSOLL-RAND NO TIENE CONTROL. POR LO TANTO INGERSOLL-RAND NO PUEDE SER RESPONSABLE POR EQUIPOS EN LOS QUE SE HAN USADO PARTES NO APROBADAS.

El fabricante se reserva el derecho a hacer cambios o adicionar mejoras sin notificación y sin incurrir en la obligación de hacer dichos cambios o adicionar tales mejoras a productos vendidos previamente.

GLOSARIO

Lista de Partes de Conjuntos de Ensamble
Las partes están listadas en secuencia de desarme en donde sea aplicable. La relación de un artículo con su más alto e inmediato ensamble está indicado por una indentación (•). Por ejemplo en la columna de DESCRIPCIÓN:

Ensambles y partes detalladas

- Partes para ensambles y partes detalladas
- • Subensambles
- • • Partes detalladas para sub-ensambles etc.

Columna de Items
El número de item es el asignado a la parte en el listado. Este número de item identifica la parte en la ilustración asociada. Las abreviaturas siguientes podrían aparecer en esta columna:

NI — No ilustra.

REF — Para la referencia. Refiera a la página e ilustración apropiada.

Columna de Numero de Parte
Todos los números son números de parte INGERSOLL-RAND los cuales deben ser especificados cuando se ordenen los repuestos. Las abreviaturas siguientes podrían aparecer en esta columna:

NA — Significan que la parte no es aplicable a determinados modelos.

NSS — Indican que la parte no se vende por separado para determinados modelos. Las letras

* — Los Materiales Consumibles (lubricantes, adhesivos, etc.). Compredirectamente desde un INGERSOLL-RAND Distribuidor de Servicio o Air Center.

** — El Número de Parte Varía. Especifique los datos completos de compresor cuandoordenación.

Columna de Descripcion
Esta columna de descripción contiene el nombre del artículo estándar con modificadores. La relación de un artículo con su próximo ensamble más alto se muestra en esta columna por una indentación. Siempre incluir la descripción cuando ordenadora conjuntos o partes dereemplazo.

Columna de Cantidad Por Ensamble
Las cantidades especificadas en esta columna son el número de partes usadas por cada ensamble superior y no necesariamente son el número total de partes del modelo en general. Especifique la cantidad deseada cuando partes ordenadoras de reemplazo.

Como Seleccionar Repuestos Recomendados
Este catálogo contiene una lista de partes que está incluidas en cada una de las siguientes clases de repuestos recomendados:

CLASE 1 — MINIMA. Sugerida para uso doméstico donde interrupciones en la continuidad del servicio no son importantes.

CLASE 2 — PROMEDIO. Sugerida para servicio doméstico donde algunas interrupciones en la continuidad del servicio no son objetables.

CLASE 3 — MAXIMA. Sugerida para exportación o para servicio doméstico donde la interrupción en el servicio es objetable.

Conjuntos de Partes
Los conjuntos de Partes son disponibles para todos los compresors. Estosconjuntos se diseñan para proveer todas las partes usted necesitará desempeñarel mantenimiento de rutina y repara tareas. Una lista de Conjuntosdisponibles se incluye en el lista de partes que vino con su compresor. Cuando se ordenen repuestos recomendados o kits prácticos, siga el procedimiento descrito para partes del compresor.

INSTRUCCIONES DE ORDEN DE COMPRA

Todas las partes enumeraron en el Lista de Partes para su compresor son disponibles mediante su Air Center o Distribuidor de Servicio de INGERSOLL-RAND. Consulte el Directorio de Distribuidores incluyócon su compresor para ubicar el distribuidor en su área.

Cuando se ordenen repuestos, por favor especifique:

1. El MODELO y NUMERO DE SERIE como está impreso en la placa del compresor
2. El NUMERO DE FORMATO de la lista de partes.
3. La CANTIDAD, DESCRIPCION y NUMERO DE PARTE exactamente como fue listado.

EJEMPLO

Envíe las siguientes partes para un modelo	7100
Número de Serie	T30000000
Número de formato de la literatura	SCD-478A
1 Interruptor, Presión	37005907
2 Elemento, Filtro	32012957
1 Manómetro	32013872

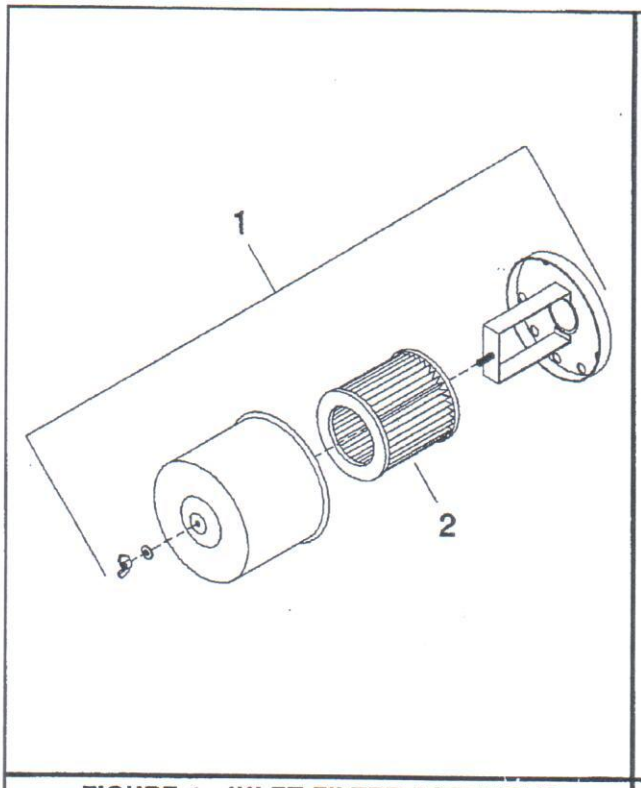

FIGURE 1. INLET FILTER ASSEMBLY

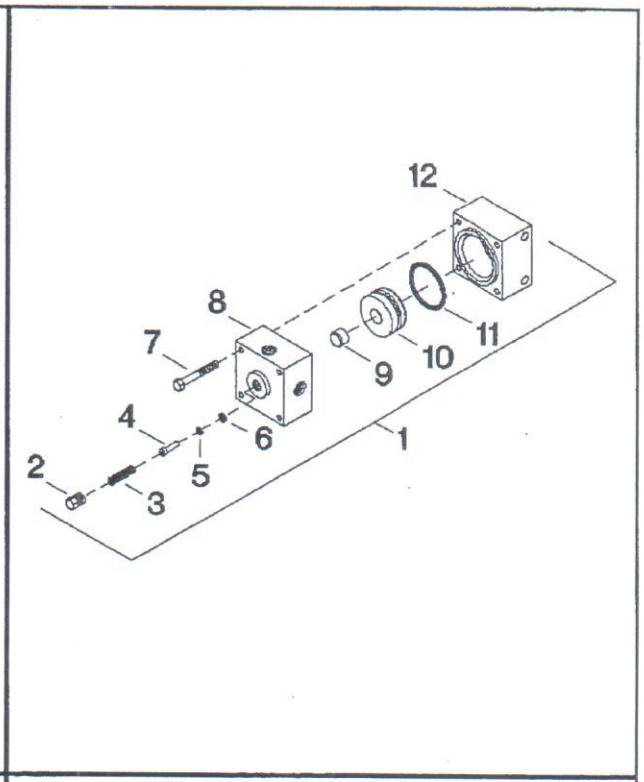

FIGURE 2. UL 104B VALVE

FIGURE 1. INLET FILTER ASSEMBLY

REF. NBR.	PART NUMBER	DESCRIPTION	UNITS PER. ASSY.	REC. SPARES 1	2	3
1-1	32109779	FILTER COMPLETE - INLET	1			
1-2	32012957	•ELEMENT, FILTER - 10 MICRON	1	1	1	1
		IF FILTER ELEMENT REPLACEMENT IS DESIRED WE RECOMMEND AN ECONOMICAL FILTER KIT. SEE PAGE 14.				

FIGURE 2. UL104B VALVE

REF. NBR.	PART NUMBER	DESCRIPTION	UNITS PER. ASSY.	REC. SPARES 1	2	3
2-1	37151172	VALVE, UL 104B	1			
2-2	95372199	•PLUG, PIPE - 1/8	1			
2-3	32106700	•SPRING	1			
2-4	31513534	•VALVE	1			
2-5	95022711	•O-RING	1	1	1	2
2-6	32002065	•RING, BACKUP	1			
2-7	95116745	•CAPSCREW - HEX 1/4-20 x 1-3/4	4			
2-8	30209548	•BODY, VALVE SEAT	1			
2-9	30217624	•SEAT, VALVE - CONDENSATE DRAIN	1	1	1	2
2-10	30221287	•PISTON	1			
2-11	95018420	•O-RING	1	1	1	2
2-12	30823587	•CYLINDER	1			

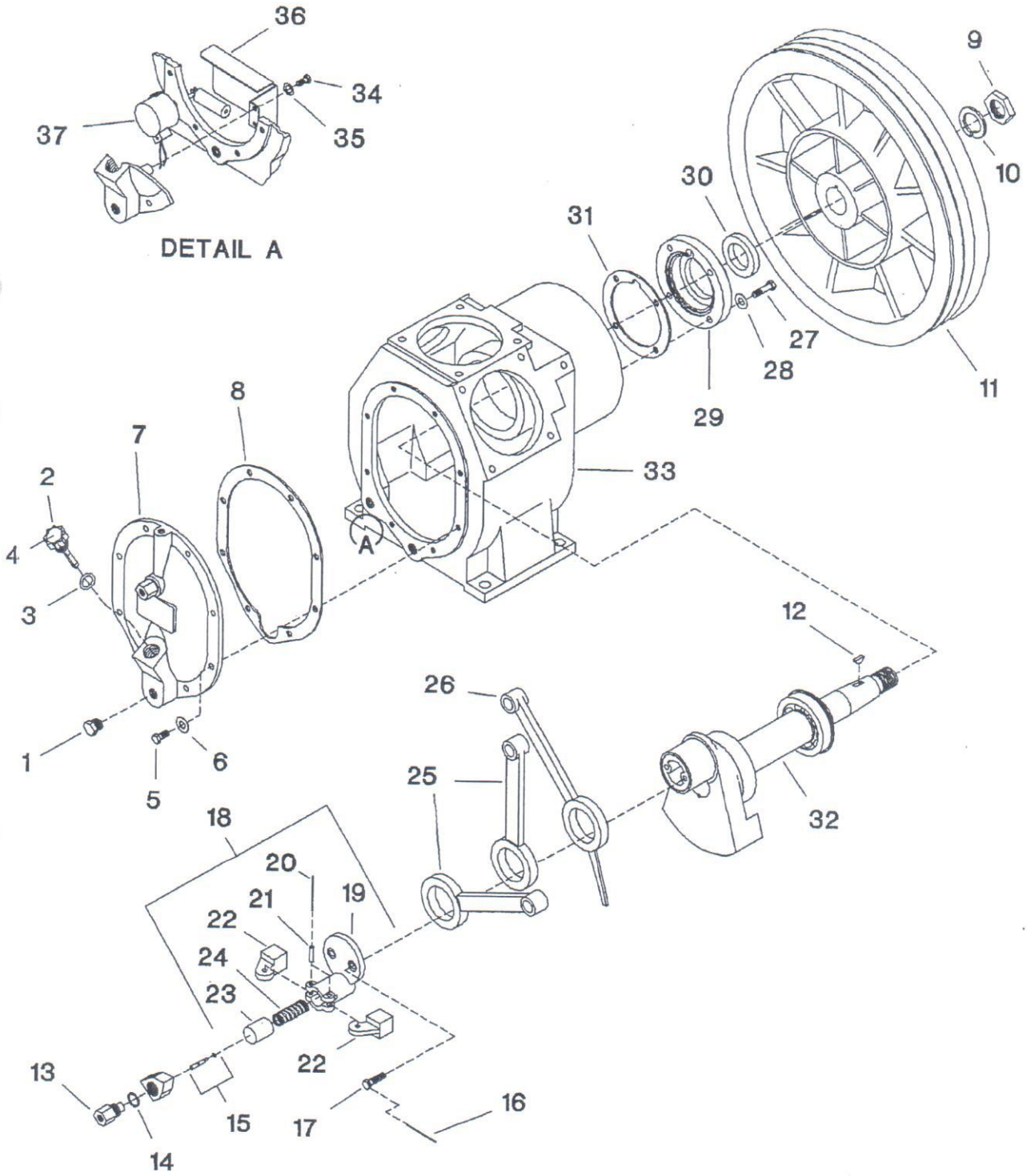

FIGURE 3. COMPRESSOR FRAME ASSEMBLY.

REF. NBR.	PART NUMBER	DESCRIPTION	UNITS PER. ASSY.	REC. SPARES 1	2	3
3-1	95344651	PLUG, PIPE - HEX HEAD 1/2"	1			
3-2	30289003	PLUG, OIL FILLER - COMPLETE	1			
3-3	95018149	•O - RING	1	1	1	2
3-4	32000655	DECAL, HAND TIGHTEN	1			
3-5	95053146	CAPSCREW - HEX 3/8-16 x 7/8"	8			
3-6	95674677	GASKET - COPPER WASHER	8			
3-7	37128089	COVER, FRAME END	1			
3-8	30439285	GASKET, FRAME END COVER	1	1	1	2
3-9	30287668	NUT - HEX 3/4-16	1			
3-10	95265690	LOCKWASHER, SPRING - 3/4"	1			
3-11	32003667	WHEEL, V-BELT	1			
3-12	95083721	KEY, WOODRUFF	1			
3-13	37113701	VALVE, PILOT	1		1	1
3-14	30346597	WASHER, COPPER	1			
3-15	32028706	PIN ASSEMBLY, THRUST	1		1	2
3-16	90799289	LOCKWIRE, 20 GA x 5"	1			
3-17	95101929	CAPSCREW - 3/8-16 x 1"	2			
3-18	30210272	CAP ASSEMBLY, CRANKPIN	1			
3-19	30210322	•BODY, CRANKPIN CAP	1			
3-20	90799271	•LOCKWIRE, 12 GA x 4"	1			
3-21	30214951	•PIN, CENTRIFUGAL UNLOADER WEIGHT	2			
3-22	30220875	•WEIGHT, CENTRIFUGAL UNLOADER	2			
3-23	30285688	•PLUNGER, CENTRIFUGAL UNLOADER	1			
3-24	30815898	•SPRING, CENTRIFUGAL UNLOADER	1			1
3-25	32003659	ROD, CONNECTING	2		1	2
3-26	32003642	ROD, CONNECTING	1		1	1
3-27	95053146	CAPSCREW - HEX 3/8-16 x 7/8"	4			
3-28	95674677	GASKET - COPPER WASHER	4			
3-29	37128071	COVER, SHAFT END	1			
3-30	32204562	SEAL, OIL	1		1	2
3-31	30294961	GASKET, SHAFT END COVER	1	1	1	2
3-32	32025694	ASSEMBLY, CRANKSHAFT	1			
3-33	32182602	FRAME, COMPRESSOR	1			
		DETAIL A				
3-34	95053070	CAPSCREW - HEX 1/4-20 x 1/2	2			
3-35	95043196	LOCKWASHER, SPRING - 1/4	2			
3-36	30290043	BAFFLE, LOW OIL LEVEL SWITCH	1			
		OPTIONAL EQUIPMENT				
3-37	32201527	SWITCH, LOW OIL LEVEL	1			
		IF BEARING AND CONNECTING ROD REPLACEMENT IS DESIRED, WE RECOMMEND A BEARING/CONNECTING ROD KIT. SEE PAGE 14.				

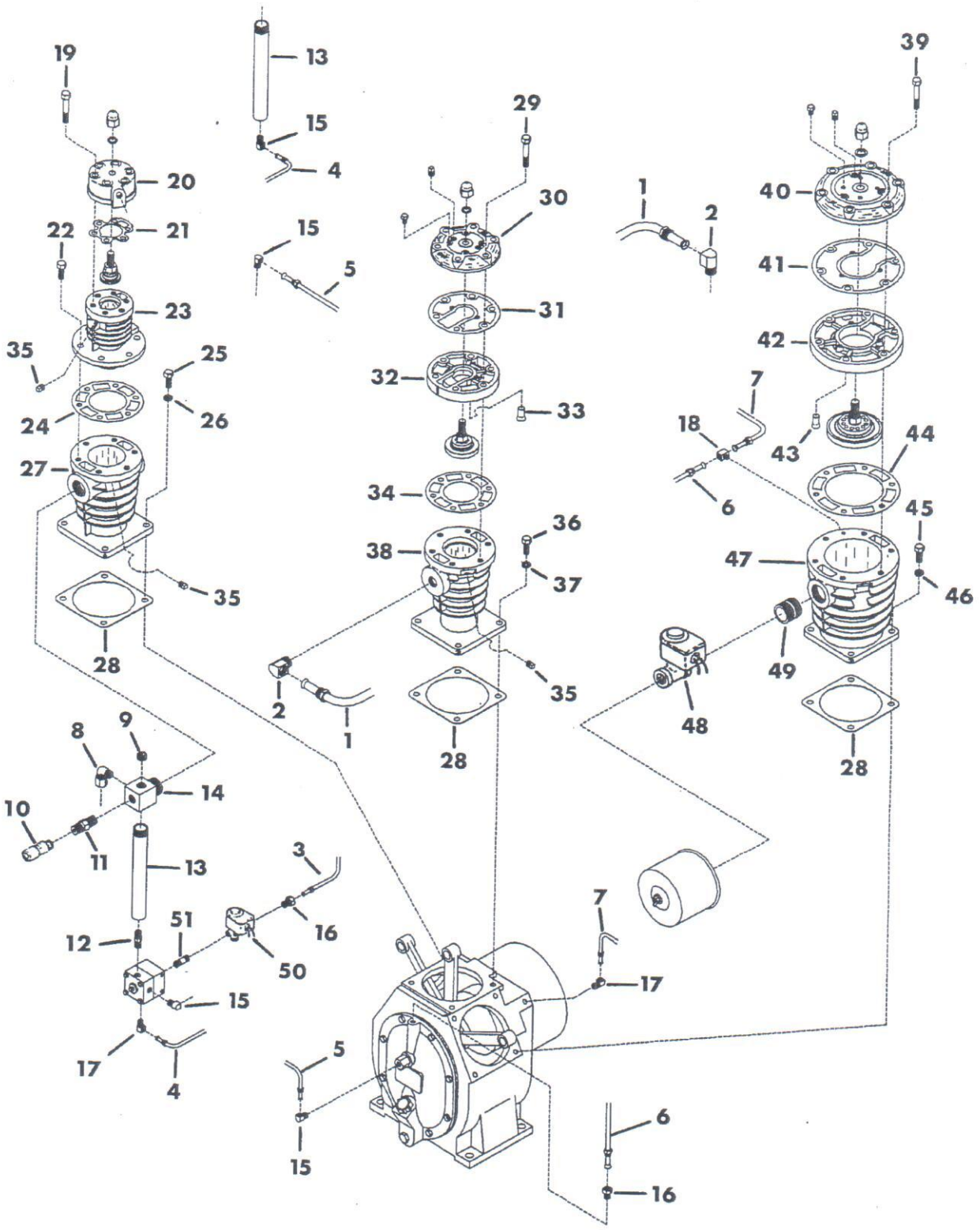

FIGURE 5. MODEL 15T2 BARE COMPRESSOR.

REF. NBR.	PART NUMBER	DESCRIPTION	UNITS PER. ASSY.	REC. SPARES		
				1	1	3
4-1	37131083	TUBE ASSEMBLY, 2nd STAGE/INTERCOOLER	1			
4-2	95031761	TUBE ELBOW - 3/4 x 3/4	2			
4-3	37131166	TUBE ASSEMBLY, CONTROL AIR	1			
4-4	37131182	TUBE ASSEMBLY, 2nd STAGE TRAP/UL104B	1			
4-5	37131075	TUBE ASSEMBLY, 2nd STAGE INTERCOOLER/PILOT VALVE	1			
4-6	37131034	TUBE ASSY., TOP OF FRAME END COVER/1st STAGE CYLINDER	1			
4-7	37131026	TUBE ASSEMBLY, BREATHER	1			
4-8	95098265	TUBE ELBOW - 1/2 x 3/8	1			
4-9	95078648	PLUG, PIPE - SQUARE COUNTERSUNK 1/2	1			
4-10	32162943	VALVE, CHECK - H.P.	1			1
4-11	32166245	NIPPLE, HEX - 1/2	1			
4-12	30214738	NIPPLE, HEX - 1/4	1			
4-13	32003634	LEG, CONDENSATE DRAIN	2			
4-14	30283790	CONNECTION, DRAIN LEG	1			
4-15	95110441	ELBOW, TUBE - 5/16 x 1/4	4			
4-16	32157554	CONNECTOR, MALE - 5/16 x 1/4	2			
4-17	95031860	ELBOW, TUBE - 5/16 x 1/8	2			
4-18	95007522	TEE, MALE BRANCH - 5/16 x 1/8	1			
4-19	95104212	CAPSCREW - HEX 1/2-13 x 2-3/4	6			
4-20	37130655	AIRHEAD - H.P.	1			
4-21	30294284	GASKET, AIRHEAD	1	1	1	2
4-22	95053567	CAPSCREW - HEX 1/2-13 x 1-1/4	6			
4-23	37128675	CYLINDER, AIR - 1.625 INCH	1			
4-24	30294508	GASKET, AIRHEAD	1	1	1	2
4-25	95053567	CAPSCREW - HEX 1/2-13 x 1-1/4	4			
4-26	95674701	GASKET, COPPER WASHER	4			
4-27	37128501	CYLINDER, AIR - CROSSHEAD	1			
4-28	30294235	GASKET, FLANGE	3	3	3	6
4-29	95053666	CAPSCREW - HEX 1/2-13 x 2-3/4	6			
4-30	37130341	AIRHEAD, TOP	1			
4-31	37007754	GASKET, AIRHEAD - TOP/BOTTOM	1	1	1	2
4-32	37130366	AIRHEAD, BOTTOM	1			
4-33	37114030	DOWEL	1			
4-34	30294508	GASKET, AIRHEAD	1	1	1	2
4-35	95033593	PLUG, PIPE - SOLID SQUARE HEAD - 1/4	3			
4-36	95053567	CAPSCREW - HEX 1/2-13 x 1-1/4	4			
4-37	95674701	GASKET, COPPER WASHER	4			
4-38	37128725	CYLINDER, AIR - 3 INCH	1			
4-39	95043790	CAPSCREW - HEX 1/2-13 x 3	6			
4-40	37130531	AIRHEAD, TOP	1			
4-41	37047156	GASKET, AIRHEAD - TOP/BOTTOM	1	1	1	2
4-42	37130556	AIRHEAD, BOTTOM	1			
4-43	37114030	DOWEL	1			
4-44	30294326	GASKET, AIRHEAD	1	1	1	2
4-45	95053567	CAPSCREW - HEX 1/2-13 x 1-1/4	4			
4-46	95674701	GASKET, COPPER WASHER	4			
4-47	37128832	CYLINDER, AIR - 5.5 INCH	1			
		NOTE: PARTS LISTED BELOW USED WITH OPTIONAL CONSTANT SPEED				
4-48	32028508	VALVE, SOLENOID - 2 WAY	1			1
4-49	95640108	NIPPLE, CLOSE - 1-1/2 x 1-3/4	1			
4-50	32039778	VALVE, SOLENOID - 3 WAY	1			1
4-51	95376072	NIPPLE, SHORT - 1/4 x 1-1/2	1			

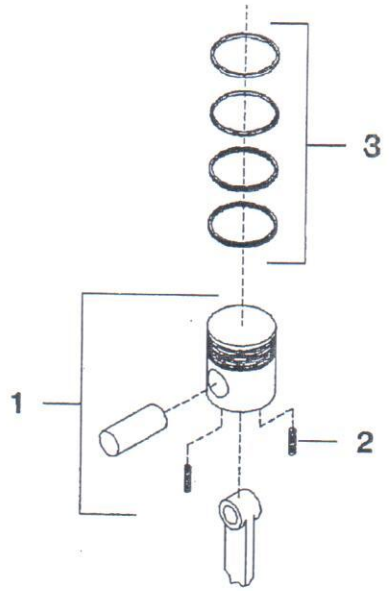

FIGURE 6.
PISTON/PIN AND RING ASSEMBLY
(3 INCH)

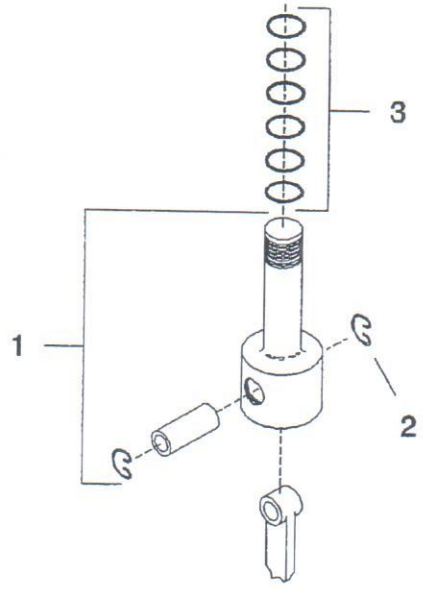

FIGURE 5.
PISTON/PIN AND RING ASSEMBLY
(1.625 INCH)

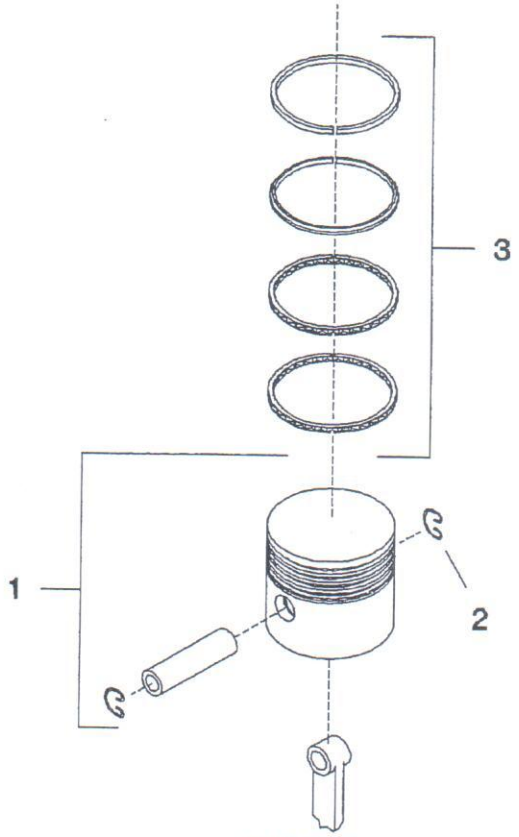

FIGURE 7.
PISTON/PIN AND RING ASSEMBLY
(5.5 INCH)

FIGURE 5, 6, 7. PISTON/PIN & RING ASSEMBLIES.

REF. NBR.	PART NUMBER	DESCRIPTION	UNITS PER. ASSY.	REC. SPARES 1	2	3
		FIGURE 5.				
5-1	30215438	ASSEMBLY, PISTON/PIN - 1.625 INCH - 3rd STAGE	1		1	1
5-2	30288450	•RING, LOCK	2			
5-3	37138146	SET, RING	1	1	1	2
		IF PISTON RING REPLACEMENT IS DESIRED, WE RECOMMEND AN ECONOMICAL RING/GASKET KIT. SEE PAGE 14.				

REF. NBR.	PART NUMBER	DESCRIPTION	UNITS PER. ASSY.	REC. SPARES 1	2	3
		FIGURE 6.				
6-1	30292460	ASSEMBLY, PISTON/PIN - 3 INCH - 2nd STAGE	1		1	1
6-2	95065439	•SETSCREW - HEX 1/4-20 x 1-1/4"	2			
6-3	32194276	SET, RING	1	1	1	2
		IF PISTON RING REPLACEMENT IS DESIRED, WE RECOMMEND AN ECONOMICAL RING/GASKET KIT. SEE PAGE 14.				

REF. NBR.	PART NUMBER	DESCRIPTION	UNITS PER. ASSY.	REC. SPARES 1	2	3
		FIGURE 7.				
7-1	30215222	ASSEMBLY, PISTON/PIN - 5.5 INCH - 1st STAGE	1		1	1
7-2	30288450	•RING, LOCK	2			
7-3	32194144	SET, RING	1	1	1	2
		IF PISTON RING REPLACEMENT IS DESIRED, WE RECOMMEND AN ECONOMICAL RING/GASKET KIT. SEE PAGE 14.				

204/5127

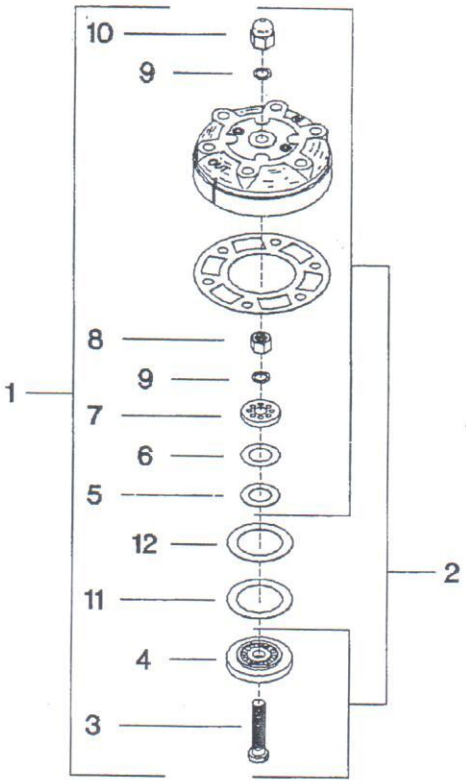

FIGURE 9.
35 GA. VALVE ASSEMBLY

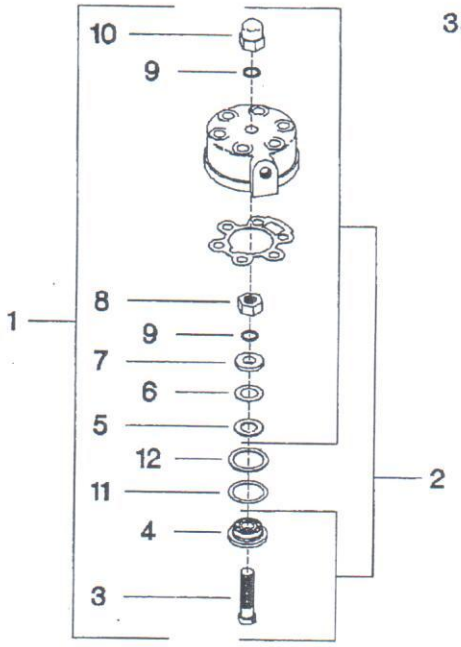

FIGURE 8.
20 GA. VALVE ASSEMBLY

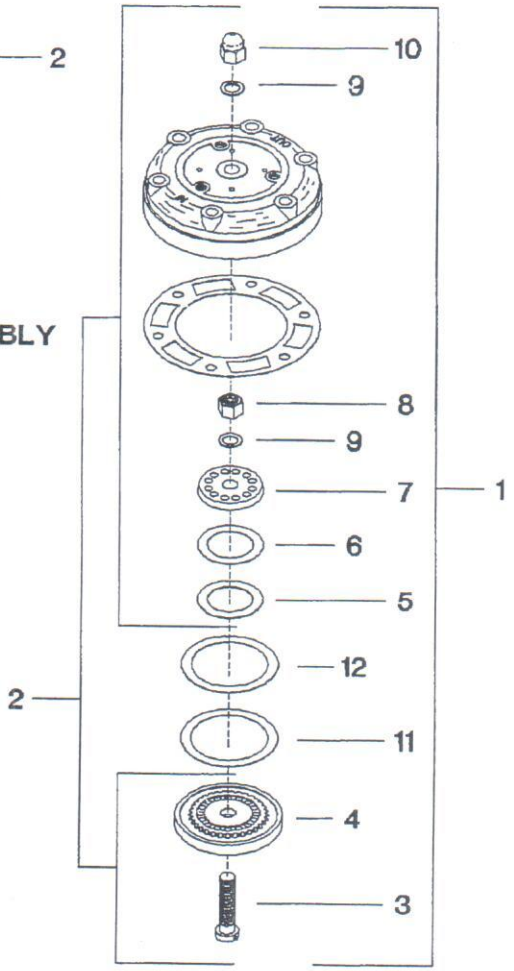

FIGURE 10.
55 GA. VALVE ASSEMBLY

FIGURE 8, 9, 10. VALVE ASSEMBLIES, 15T2 BARE COMPRESSOR.

204/4/28

REF. NBR.	PART NUMBER	DESCRIPTION	UNITS PER. ASSY.	REC. SPARES 1	1	3
		FIGURE 8.				
8-1	31517725	VALVE, 20 GA - COMPLETE	1		1	1
8-2	32156697	•VALVE ASSEMBLY	1			
8-3	30220941	• •BOLT, VALVE	1			
8-4	30217657	• •SEAT, VALVE-DISCHARGE	1			
8-5	30215925	• •PLATE, VALVE-DISCHARGE	1	1	1	1
8-6	30221584	• •SPRING, VALVE-DISCHARGE	1	1	1	1
8-7	30218945	• •PLATE, STOP-DISCHARGE	1			
8-8	95369229	• •NUT, HEX - 5/8-18	1			
8-9	32158644	• •WASHER, BELLEVILLE - 5/8	2			2
8-10	30287643	• •NUT, ACORN - 5/8-18	1			
8-11	30221493	•SPRING, VALVE-INLET	1	1	1	1
8-12	30215834	•PLATE, VALVE-INLET	1	1	1	1
		IF VALVE REPLACEMENT IS DESIRED, WE RECOMMEND AN ECONOMICAL VALVE/GASKET KIT. SEE PAGE 14.				

REF. NBR.	PART NUMBER	DESCRIPTION	UNITS PER. ASSY.	REC. SPARES 1	1	3
		FIGURE 9.				
9-1	37004827	VALVE, 35 GA - COMPLETE	1		1	1
9-2	32156713	•VALVE ASSEMBLY	1			
9-3	30220925	• •BOLT, VALVE	1			
9-4	30217608	• •SEAT, VALVE-DISCHARGE	1			
9-5	30215941	• •PLATE, VALVE-DISCHARGE	1	1	1	1
9-6	30221576	• •SPRING, VALVE-DISCHARGE	1	1	1	1
9-7	30218994	• •PLATE, STOP-DISCHARGE	1			
9-8	95076808	• •NUT, HEX - 5/8-18	1			
9-9	32158644	• •WASHER, BELLEVILLE - 5/8	2			2
9-10	30287643	• •NUT, ACORN - 5/8-18	1			
9-11	30221501	•SPRING, VALVE-INLET	1	1	1	1
9-12	30181499	•PLATE, VALVE-INLET	1	1	1	1
		IF VALVE REPLACEMENT IS DESIRED, WE RECOMMEND AN ECONOMICAL VALVE/GASKET KIT. SEE PAGE 14.				

REF. NBR.	PART NUMBER	DESCRIPTION	UNITS PER. ASSY.	REC. SPARES 1	1	3
		FIGURE 10.				
10-1	37101946	VALVE, 55 GA - COMPLETE	1		1	1
10-2	32156747	•VALVE ASSEMBLY	1			
10-3	30279897	• •BOLT, VALVE	1			
10-4	30217673	• •SEAT, VALVE-DISCHARGE	1			
10-5	30181499	• •PLATE, VALVE-DISCHARGE	1	1	1	1
10-6	30221501	• •SPRING, VALVE-DISCHARGE	1	1	1	1
10-7	30218978	• •PLATE, STOP-DISCHARGE	1			
10-8	95076816	• •NUT, HEX - 3/4-16	1			
10-9	37092897	• •WASHER, BELLEVILLE - 3/4	2			2
10-10	30287650	• •NUT, ACORN - 3/4-16	1			
10-11	30221550	•SPRING, VALVE-INLET	1	1	1	1
10-12	30215891	•PLATE, VALVE-INLET	1	1	1	1
		IF VALVE REPLACEMENT IS DESIRED, WE RECOMMEND AN ECONOMICAL VALVE/GASKET KIT. SEE PAGE 14.				

204/9189

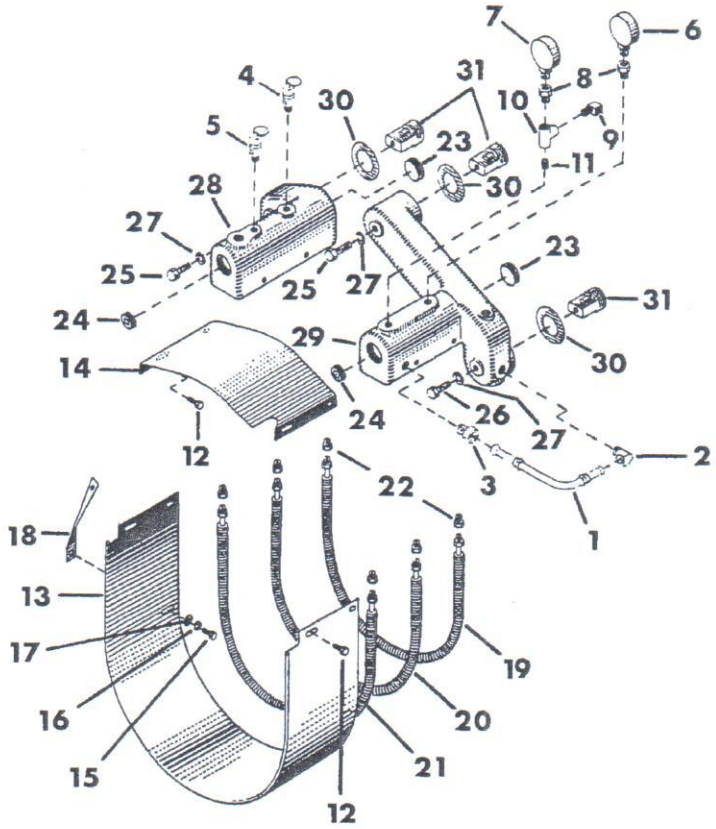

FIGURE 11. 15T2 INTERCOOLER ASSEMBLY.

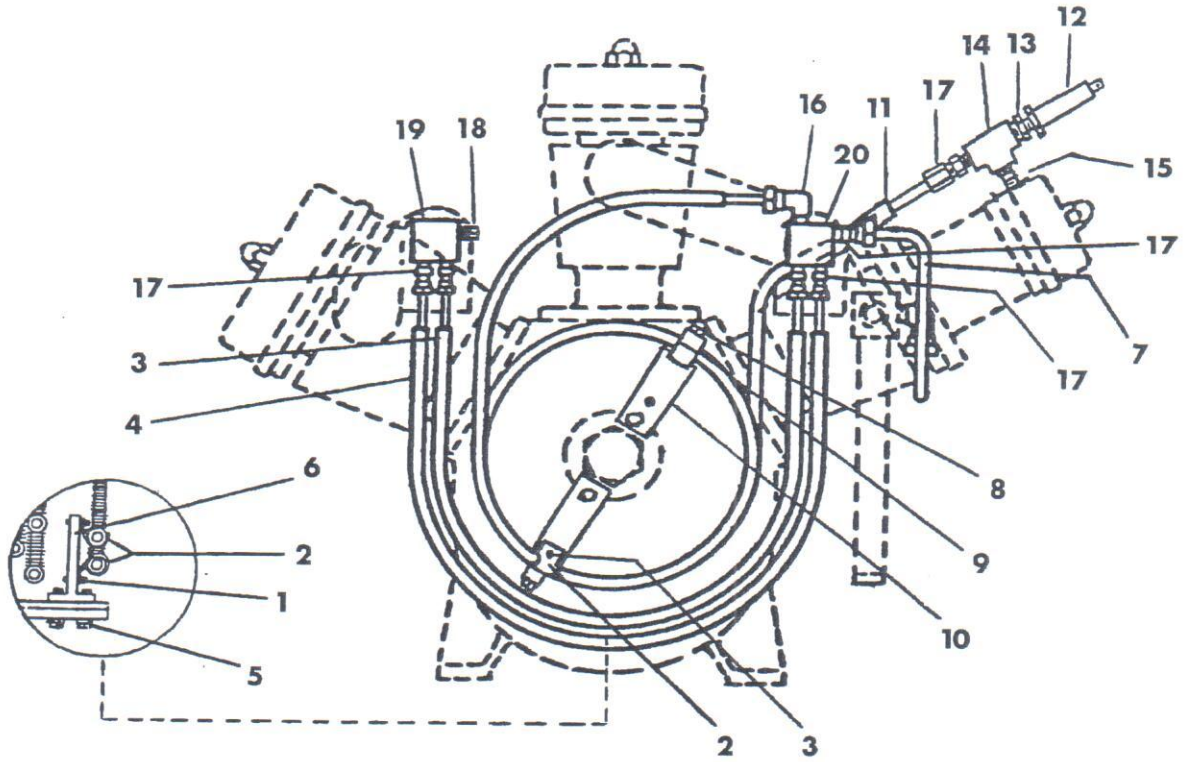

FIGURE 12. 15T2 AFTERCOOLER ASSEMBLY.

REF. NBR.	PART NUMBER	DESCRIPTION	UNITS PER. ASSY.	REC. SPARES 1	1	3
		FIGURE 11. 15T2 INTERCOOLER ASSEMBLY.				
11-1	37131109	ASSEMBLY, TUBE - INTERCOOLER/3rd STAGE	1			
11-2	95031761	ELBOW, TUBE - 3/4 x 3/4	1			
11-3	95083275	CONNECTOR, TUBE - 3/4 x 3/4	1			
11-4	72062151	VALVE, SAFETY - 60 PSIG	1			1
11-5	32174799	VALVE, SAFETY - 260 PSIG	1			1
11-6	32127896	GAUGE, PRESSURE - 100 PSIG	1			1
11-7	32013898	GAUGE, PRESSURE - 300 PSIG	1			1
11-8	30282396	DAMPENER ASSEMBLY - PULSATION	2			
11-9	95110441	ELBOW, TUBE - 1/4	1			
11-10	95006524	TEE, PIPE - 1/4	1			
11-11	95426714	NIPPLE, CLOSE - 1/4 x 7/8	1			
11-12	32175572	CAPSCREW - HEX 1/4-20 x 1/2	8			
11-13	32204471	SHROUD, INTERCOOLER - BOTTOM	1			
11-14	30218325	SHROUD, INTERCOOLER - TOP	1			
11-15	95053070	CAPSCREW - HEX 1/4-20 x 1/2	1			
11-16	95094298	WASHER, FLAT - 1/4	1			
11-17	95043196	LOCKWASHER, SPRING - 1/4	1			
11-18	30209829	BRACE, INTERCOOLER SHROUD	1			
11-19	32024697	TUBE ASSEMBLY, FINNED - 36"	7		1	2
11-20	32025678	TUBE ASSEMBLY, FINNED - 38-3/4"	5		1	2
11-21	32025686	TUBE ASSEMBLY, FINNED - 41-1/2"	7		1	2
11-22	95083143	CONNECTOR, MALE - 3/8 x 1/4"	38			
11-23	95033338	PLUG, SQUARE COUNTERSUNK - 1-1/4"	2			
11-24	32186413	PLUG, SQUARE COUNTERSUNK - 1"	2			
11-25	95043808	CAPSCREW - HEX 5/8-11 x 2-1/4	1			
11-26	95002168	CAPSCREW - HEX 5/8-11 x 2-1/2	2			
11-27	30345185	WASHER, FLAT - 5/8	3			
11-28	37129038	MANIFOLD, INTERCOOLER	1			
11-29	37129046	MANIFOLD, INTERCOOLER	1			
11-30	30294870	GASKET, MANIFOLD	3	1	1	2
11-31	30221121	CONNECTION, MANIFOLD	3			

REF. NBR.	PART NUMBER	DESCRIPTION	UNITS PER. ASSY.	REC. SPARES 1	2	3
		FIGURE 12. 15T2 AFTERCOOLER ASSEMBLY.				
12-1	32175572	CAPSCREW - HEX 1/4-20 x 1/2"	3			
12-2	32065641	CLAMP, TUBE - 3/4"	3			
12-3	30335459	TUBING, FINNED - 41 INCH	1			
12-4	30335442	TUBING, FINNED - 37 INCH	1			
12-5	95079703	CAPSCREW - HEX 3/8-16 x 1/2	2			
12-6	37129053	BRACE	1			
12-7	37131125	TUBE ASSEMBLY, AFTERCOOLER/TRAP	1			
12-8	95043766	CAPSCREW - HEX 3/8-16 x 1-1/4	4			
12-9	30209795	CLAMP, AFTERCOOLER	2			
12-10	32006991	BRACE, AFTERCOOLER	2			
12-11	30335525	TUBING, FINNED - AFTERCOOLER	1			1
12-12	32203267	VALVE, SAFETY - 1400 PSI	1			1
12-13	32179046	BUSHING, REDUCING - 3/8 x 1/4	1			
12-14	95007852	TEE, PIPE - 3/8	1			
12-15	95554630	NIPPLE, SHORT - 3/8 x 1-1/2	1			
12-16	95098265	TUBE ELBOW - 1/2 x 3/8	1			
12-17	95229571	CONNECTOR, TUBE - 1/2 x 3/8	6			
12-18	95033601	PLUG, PIPE - SOLID SQUARE HEAD 3/8	1			
12-19	30284137	CONNECTION, AFTERCOOLER - (3 HOLES)	1			
12-20	30284152	CONNECTION, AFTERCOOLER - (4 HOLES)	1			

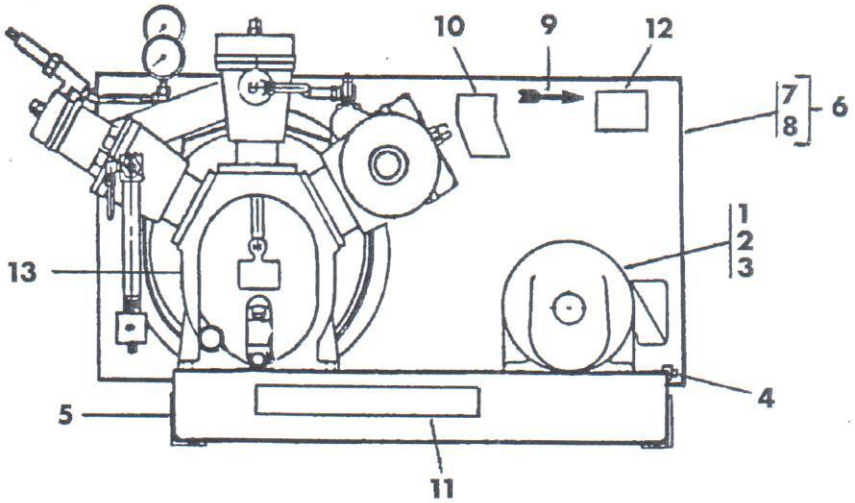

FIGURE 7. COMPRESSOR DRIVE, SUB-BASE, AND ACCESSORIES.

REF. NBR.	PART NUMBER	DESCRIPTION	UNITS PER. ASSY.	REC. SPARES 1	2	3
7-1	*	MOTOR, ELECTRIC	1			
7-2	32118192	PULLEY, MOTOR - 10HP 555 RPM	1			
7-2	32118135	PULLEY, MOTOR - 15HP 750 RPM	1			
7-2	32128910	PULLEY, MOTOR - 15HP 900 RPM	1			
7-3	95100541	BELT, "V" - 555 & 750 RPM	3			3
7-3	95100558	BELT, "V" - 900 RPM	3			3
7-4	32188708	TIGHTENER, BELT - COMPLETE	1			
7-5	32001778	SUB-BASE ASSEMBLY	1			
7-6	32002644	BELTGUARD - COMPLETE	1			
7-7	32003410	•BACK, BELTGUARD	1			
7-8	32003329	•COVER, BELTGUARD	1			
7-9	30286686	DECAL, ROTATION ARROW	1			
7-10	32022923	DECAL, T30	1			
7-11	30288054	DECAL, INGERSOLL-RAND	1			
7-12	32015620	DECAL, MAINTENANCE	1			
7-13	97003636	DECAL, DANGER	1			
		OPTIONAL EQUIPMENT				
* * *	37005840	SWITCH, PRESSURE - NEMA 1 - FOR 260 TO 600 PSI	1			
* * *	37005857	SWITCH, PRESSURE - NEMA 1 - FOR 601 TO 1000 PSI	1			
* * *	32190712	SWITCH, HIGH AIR TEMPERATURE - NEMA 1, 4, 12, & 13	1			
* * *	32190738	THERMOWELL, 1/2" - 1000 PSI	1			

* Specify discharge pressure of compressor and complete motor nameplate data.

* * Purchase from your local Ingersoll-Rand Distributor.

* * * Not Shown in Illustration

STEP SAVER KIT

For your convenience, the following parts and/or spare parts for your compressor are available in parts kits. When ordering the kits below, use kit names as Description and the Part No. as shown.

PART NO.	DESCRIPTION
32166787	KIT, FILTER
32133951	KIT, VALVE/GASKET
32133969	KIT, RING/GASKET
32127516	KIT, BEARING/CONNECTING ROD
30423339	KIT, GASKET

GRAPHIC FORM AND MEANING OF ISO SYMBOLS

	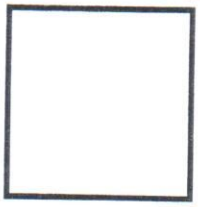	
Prohibition / Mandatory	**Information / Instructions**	**Warning**
		
WARNING: Electrical shock risk.	**WARNING – Hot surface.**	**WARNING – Pressurized component or system.**
		
Read the Operation and Maintenance manual before operation or maintenance of this machine is undertaken.	Maintenance prohibited	Do not operate with the doors or enclosure open.
		
Do not breathe the compressed air from this machine.	Unit is remotely controlled and may start without warning.	Do not operate the machine without the guard fitted.
		
On (power).	Off (power).	

Three Phase Wiring

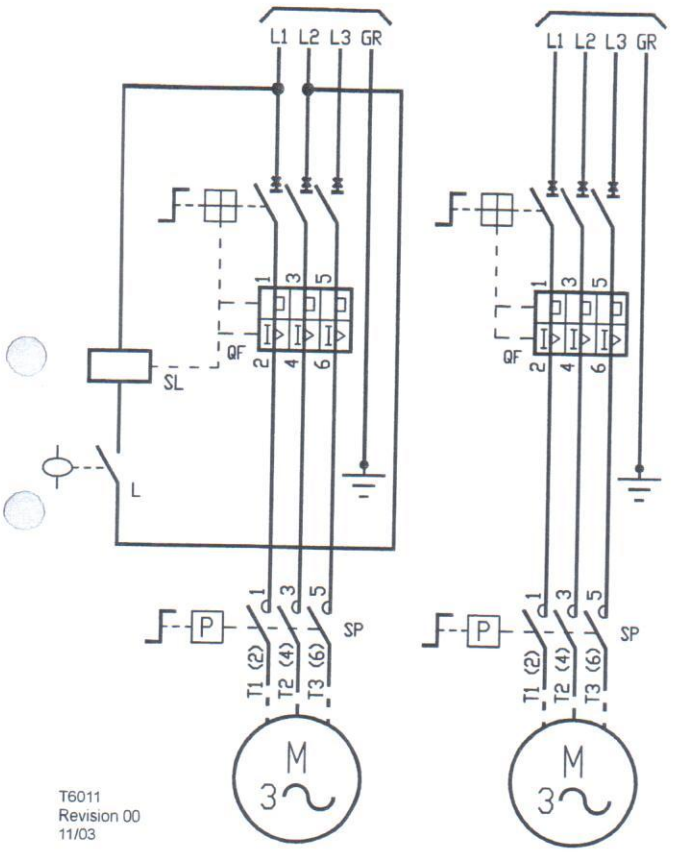

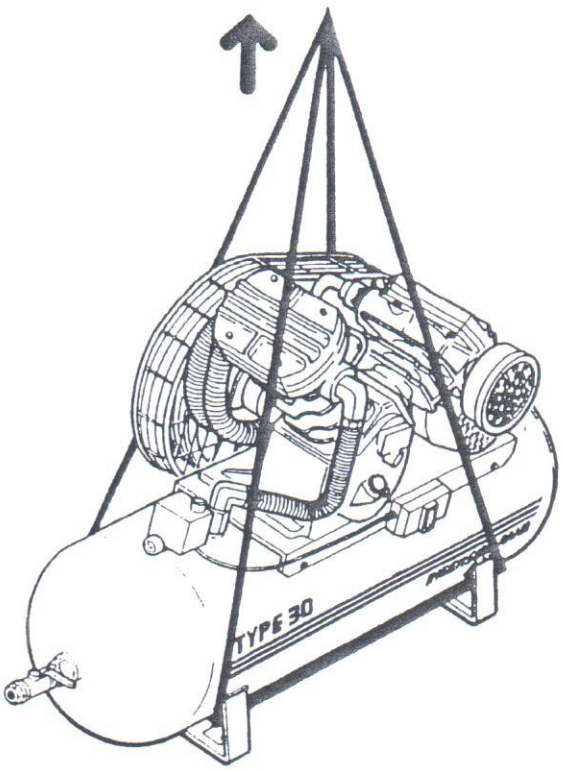

Cast Iron Compressor Models T30/2340–2475–2545–7100–3000–15T

Check the crankcase for proper lubricant level prior to each use by removing the oil filler plug. The Lubricant level should be at the bottom thread of the filler opening at all times. Tighten Lubricant filler plug ONLY HAND TIGHT.

Ingersoll–Rand recommends the use of All Season T30 Select™ lubricant from start up. All Season T30 Select™ may be used when ambient temperatures are between –1°C (30°F) and 41°C (105°F). If petroleum oil is used, the viscosity and additives should be selected to suit operating conditions. Consult your local distributor for recommendations and supply.

LEGEND

L	LOLS (Low oil level switch)
QF	Motor overload
SL	Coil
SP	Switch pressure
M	Motor
⌐	0 – 1 (On – Off) Selector

LUBRICATION

Lubricant changes should be made in accordance with the maintenance guide. For maximum removal of impurities, drain only when crankcase is warm.

Aluminium Compressor Models Euro 10/20 E2.8 &E10

Check that the oil is level with the red dot on the sight glass or the indent on the dipstick. If below, fill to the level with SAE 40 for summer or SAE 30 for winter, non–detergent compressor oil, containing a rust and oxidation inhibitor.

OPERATION

Dual control is provided as standard and combines the benefits of AS&S and CSC control as described below.

For dual control operation the cut–out setting of the pressure switch must be set to at least 0.3 bar higher than the cut–out pressure of the auxiliary valve.

The pressure switch setting on all oil–less models is factory set at 8.5 bar g.

Auto–Stop–and–Start–Machine(AS&S)

The compressor will start and stop automatically, controlled by a pressure switch responding to air receiver pressure.

This cut–out pressure can be adjusted but must never be increased above the maximum recommended working pressure.

PRESSURE SWITCH ADJUSTMENT

After removing the cover, turn the range adjuster at the top of the pressure switch clockwise to increase, anti–clockwise to decrease the main pressure setting.

Turn the differential adjuster clockwise to increase, anti–clockwise to decrease the differential between cut–in and cut–out pressure.

After making adjustment, check the cut–in and cut–out pressure by means of air receiver pressure gauge and replace the cover.

INTERMITTENT DUTY FORMULA

All two stage and high pressure Euro 30 models operating above 14 bar are to be operated according to the following formula:

Pump–up time should not ordinarily exceed 30 minutes, or be less than 10 minutes. Shutdown periods between cycles of operation should be at least equal to the pump–up time. Note: when the compressor is regulated by constant speed control, the shut–down period is the time the compressor is operating unloaded.

This pump–up time limit, with the following cool–down periods, are recommended to protect valves and heads against stabili–sed high operating temperatures, which could rapidly build up carbon in these areas.

MAINTENANCE

The Ingersoll–Rand compressors have been designed to require minimum maintenance.

The following basic maintenance will ensure long, trouble–free operation.

- Change oil after first 150 hours of operation.
- Check the cylinder head bolts for tightness and adjust if required.
- For Belt Driven units check belt tension and adjust.

Daily

- Check lube level and if required top up.
- Drain the air receiver of condensate.
- Visually inspect and check for unusual noise and vibration.

Monthly

- Check the operation of the auto condensate drain.
- Remove the air intake filter element and replace if dirty. (Dusty environments require more frequent checking and replacement).
- Check belt tension and adjust if necessary.
- Inspect the crankcase breather and replace if required.
- Clean all external surfaces including cylinders, cooler and motor.
- Check relief valve operation and replace if defective.

NOTE:

1) Service intervals in months or running hours, whichever occurs first.

2) It is strongly recommended that replacement of valves and running gear is done by an authorised Distributor only.

Every 3 Months or 500 Running Hours

- Drain the lubricant from the crankcase while warm and refill, unless using All Season T30 Select™.

Every 6 months or 1000 Running Hours

- Check the cylinder head bolts for tightness and adjust if required.
- Check motor and compressor pulleys are secure.

NOTE: Belt wheel bolts have left handed threads on aluminium EURO 10/20 compressors.

- Clean and check inlet and discharge valves and replace if worn or damaged (units using Petroleum Oil).
- Clean the outer surfaces of the compressor and motor to maintain adequate cooling. (More frequently in a dusty environment).
- Replace crankcase breather.
- Replace air inlet filter.

Every Year or 2000 Running Hours

- Clean compressor and cooler internally.

Every Year or 2000 Running Hours if using All Season T30 Select™

- Clean and check inlet and discharge valves and replace if worn or damaged.
- Drain All Season T30 Select™ and replace.

Every 2 Years or 4000 Running Hours

- Inspect piston rings and rider bands and replace if required.

Every 3 Years or 8000 Running Hours

- Replace inlet and discharge valves.
- Replace crankshaft, bearings, con–rods and spacers.

AUTOMATIC CONDENSATE DRAIN VALVE (If equipped)

An automatic valve is available in order to simplify this action. This air actuated valve drains the condensate stored in the drain legs each time the compressor is cycled off or unloaded (SHUT–DOWN time period as defined in INTERMITTENT DUTY USAGE).

TIMED AUTOMATIC CONDENSATE DRAIN SYSTEM (If equipped)

For compressors which are running continuously, a timer may be added to the system. This timer causes the automatic condensate drain valve to activate without the compressor going through the SHUTDOWN time period.

CAST IRON COMPRESSORS ONLY

AIR COOLED AFTER COOLER – RADIATOR TYPE (If equipped)

This finned tube cooler resembles a radiator. It is fitted to the beltguard side of the compressor. Cooling air drawn over these tubes by the compressor fan–type beltwheel further cools the compressed air and condenses additional moisture. This liquid moisture passes on to the distribution system (or receiver if so equipped) and must be drained manually or by drain trap mounted on the receiver.

DRAIN TRAP FOR RECEIVER AUTOMATIC (If equipped)

The drain trap automatically expels condensate from the receiver. When liquid condensate builds up in the air receiver, it flows through the pipe to a manual shut–off valve, pipe tee, and into the trap body and out to the atmosphere. The drain trap must be primed to operate correctly. Once primed a negligible amount of air pressure will be expelled occasionally. Continuous air loss indicates loss of prime or service required. To prevent loss of prime, close manual shut–off valve before all air pressure is lost from receiver.

To prime the drain, (1) close the manual valve; (2) remove the pipe plug from top opening of the pipe tee; (3) pour water into the opening until full; (4) open the manual valve; (5) re–install the pipe plug tight.

CAST IRON COMPRESSORS AND VACUUM PUMPS ONLY

CRANKCASE HEATER (If equipped)

A 150 or 300 watt, 120 to 240 volt ~ AC immersion type heater is used in conjunction with a thermostat. The control circuit must be wired such that the heater element has power available even when the pressure switch is at the cut out pressure and the compressor/vacuum pump is not running. In this manner, the lubricant is maintained at a minimum temperature.

CAST IRON COMPRESSORS ONLY

INTERMITTENT DUTY USAGE (see General Information Table)

Cast iron compressor models to be operated at pressures higher than the continuous duty rated pressure must be operated in accordance with the following formula.

CAST IRON COMPRESSORS AND VACUUM PUMPS ONLY

LOW OIL LEVEL SWITCH (LOLS) (If equipped)

Two (2) types of electrical enclosures are available.

1) This LOLS provides protection to the level of IP 56, and is suitable for most indoor and outdoor installations. It carries a NEMA 4 rating used in the U.S.A. This LOLS is a single pole, single throw switch which has a maximum rating of 10 amperes at 125 volts through a maximum of 480 volts ~ AC.

2) This LOLS carries a NEMA 7 rating, suitable for hazardous locations as rated by the U.S. National Electric Code as Class I, Group C & D, and Class II, Group F & G. This LOLS is a single pole, double throw switch which has a maximum rating of 4 amperes at 250 volts ~ AC.

UNLOADING OF THE COMPRESSOR FOR STARTING

- **DISCHARGE UNLOADING SOLENOID VALVE (If equipped)**

  To decrease the load on the motor during the starting time period, a unloading solenoid valve is installed between the compressor discharge port and the system (or receiver if equipped).

  The valve is activated during the starting time period and directs the compressed air through a muffler to the atmosphere instead of into the system.

  The system pressure will not increase during the time period that the motor is connected Star. After a time delay the motor is connected Delta and the solenoid valve allows the compressed air to pass normally to the system.

HIGH PRESSURE CAST IRON COMPRESSORS

- **INLET UNLOADING SOLENOID VALVE (KIT CSC)**

  To minimize the starting torque required, a Solenoid valve is installed between the inlet filter and the bare compressor inlet port. The valve is activated during the starting time period shutting off the flow of air to the compressor inlet and reducing the torque and current needed.

SAFETY RELIEF VALVES AND DEVICES

All compressors are equipped with properly rated (flow and pressure) spring actuated, automatic reset type pressure relief valves. This type of valve can open or "pop–off" and reseat repeatedly. If the valve opens frequently, compressor maintenance is indicated. If the valve leaks, do not attempt to repair the valve, replace it. Each valve is permanently fixed (sealed against tampering) at its rated pressure. Do not attempt to reset the pressure setting of the valve. Do not operate the compressor with the valve removed or plug the valve fitting. Periodically with the compressor power OFF, pull the ring on the valve to make certain it is operating properly.

Properly rated safety valves of this type are to be installed upstream of any type of pressure blocking valve which is installed in the compressed air system.

CAST IRON COMPRESSORS ONLY MODELS 15T4 and H15T4

Compressors with four (4) stages of compression (see general information table) are also equipped with a one–time "shear–disc" type relief valve located in the fourth stage cylinder head. This type of relief valve protects against any sudden, abnormal pressure surge. The disc inside the valve assembly is designed to rupture or shear if the pressure rating is exceeded. The disc itself may be replaced if it shears. This type of valve is not pressure adjustable nor sealed against tampering.

CAST IRON VACUUM PUMPS ONLY

Care must be taken to ensure that the inlet and outlet of a vacuum pump are not confused. On models 7V and 1 5V the identity of the part is cast into the connection. On models V235, V244 and V255 refer to the following diagram.

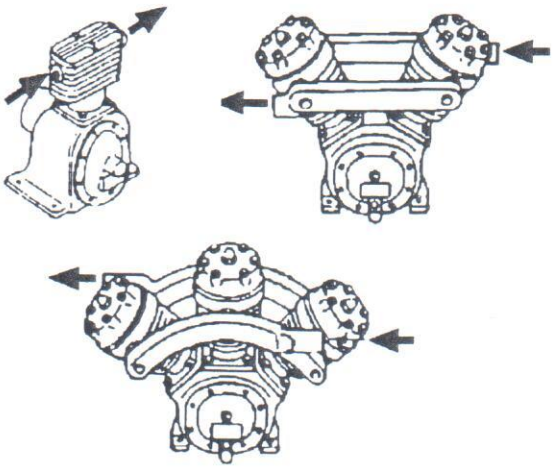

NOTICE

THE USE OF REPAIR PARTS OTHER THAN THOSE INCLUDED WITHIN THE INGERSOLL-RAND COMPANY APPROVED PARTS LIST MAY CREATE UNSAFE CONDITIONS OR MECHANICAL FAILURES OVER WHICH INGERSOLL-RAND COMPANY HAS NO CONTROL. INGERSOLL-RAND COMPANY SHALL BEAR NO RESPONSIBILITY FOR EQUIPMENT ON WHICH NON-APPROVED REPAIRS PARTS ARE INSTALLED.

The manufacturer reserves the right to make changes or add improvements without notice and without incurring any obligation to make such changes or add such improvements to products previously sold.

GLOSSARY

Group Assembly Parts List
Parts are listed in disassembly sequence, where applicable. Each assembly is broken down into subassemblies and detail parts which are idented with "bullet" (•) symbols in the DESCRIPTION column to indicate the relationship to the next higher assembly:

Assemblies and Detail Parts

- • Attaching Parts for Assemblies and Detail Parts
- • • Subassemblies
- • • • Detail Parts for Subassemblies, etc.

Reference Number Column
The reference number is the number assigned to the part in the listing. The reference number corresponds to the item on the associated illustration. Where applicable, the following abbreviations might appear in this column:

NI — Not Illustrated.

REF — Reference Only. Refer to the figure and page noted in the description column.

Part Number Column
All numbers listed in this column are INGERSOLL-RAND part numbers, and must be specified when ordering replacement parts. The following abbreviations appear in this column:

NA — Not Applicable. This abbreviation indicates items which are not used on particular models or packages.

NSS — Not Sold Separately. These items must be ordered under the next higher assembly, or, where applicable, as part of a Step Saver Kit.

* — Consumable Materials (lubricants, sealants, etc.). Purchase directly from your local INGERSOLL-RAND Air Center or Full Service Distributor.

** — Part Number Varies. Specify the compressor bare speed and complete nameplate data when ordering.

Description Column
The description column indicates the item by standard name followed by modifiers. The modifiers identify specific characteristics (i.e. dimensions, capacity, pressure setting, etc.), and/or the particular location or function on the compressor. Always include the description when ordering replacement parts or kits.

Quantity Per Assembly Column
Quantities listed in this column reflect the number used in the next higher assembly, and are not necessarily the total quantity of the part used in the complete package. Specify the desired quantity when ordering replacement parts.

Recommended Spares Column
Quantities listed in this column reflect the number of each item which we recommend be kept on hand for maintenance or repair:

CLASS 1 — MINIMUM. Recommended quantity for Domestic Service where interruptions in service are not important.

CLASS 2 — AVERAGE. Recommended quantity for Domestic Service where interruptions in continuity of service are not objectionable.

CLASS 3 — MAXIMUM. Recommended quantity for International or Domestic Service where interruptions in service are not acceptable.

Step Saver Kits
Step Saver Kits are available for all compressor models. These kits are designed to provide all of the parts you will need to perform routine maintenance and repair tasks. A list of available Step Saver Kits is included in the Parts List manual which came with your compressor. When ordering Step Saver Kits, please follow the instructions set out below for ordering replacement parts.

ORDERING INSTRUCTIONS

All parts listed in the Part List manual for your compressor are available through your local INGERSOLL-RAND Air Center or Full Service Distributor. Consult the Directory of Distributors included with your compressor to locate the distributor in your area.

When ordering replacement parts or Step Saver Kits, please specify:

1. The MODEL and SERIAL NUMBER as stamped on the compressor nameplate.
2. The FORM NUMBER of the Parts List manual.
3. The QUANTITY, DESCRIPTION and PART NUMBER exactly as listed.

EXAMPLE

Send the following parts for model	7100
Serial Number	T30000000
Literature Form Number	SCD-478A
1 Switch, Pressure - NEMA 1	37005907
2 Element, Filter	32012957
1 Gauge, Pressure	32013872

NOTA

EL USO DE PARTES PARA REPARACION DIFERENTES A LAS INCLUIDAS EN LA LISTA DE PARTES APROBADA DE INGERSOLL-RAND PUEDE CREAR CONDICIONES INSEGURAS O FALLAS MECANICAS SOBRES LAS CUALES INGERSOLL-RAND NO TIENE CONTROL. POR LO TANTO INGERSOLL-RAND NO PUEDE SER RESPONSABLE POR EQUIPOS EN LOS QUE SE HAN USADO PARTES NO APROBADAS.

El fabricante se reserva el derecho a hacer cambios o adicionar mejoras sin notificación y sin incurrir en la obligación de hacer dichos cambios o adicionar tales mejoras a productos vendidos previamente.

GLOSARIO

Lista de Partes de Conjuntos de Ensamble
Las partes están listadas en secuencia de desarme en donde sea aplicable. La relación de un artículo con su más alto e inmediato ensamble está indicado por una indentación (•). Por ejemplo en la columna de DESCRIPCIÓN:

Ensambles y partes detalladas

- • Partes para ensambles y partes detalladas
- • • Subensambles
- • • • Partes detalladas para sub-ensambles etc.

Columna de Items
El número de item es el asignado a la parte en el listado. Este número de Item identifica la parte en la ilustración asociada. Las abreviaturas siguientes podrían aparecer en esta columna:

NI — No ilustra.

REF — Para la referencia. Refiera a la página e ilustración apropiada.

Columna de Numero de Parte
Todos los números son números de parte INGERSOLL-RAND los cuales deben ser especificados cuando se ordenen los repuestos. Las abreviaturas siguientes podrían aparecer en esta columna:

NA — Significan que la parte no es aplicable a determinados modelos.

NSS — Indican que la parte no se vende por separado para determinados modelos. Las letras

* — Los Materiales Consumibles (lubricantes, adhesivos, etc.). Compredirectamente desde un INGERSOLL-RAND Distribuidor de Servicio o Air Center.

** — El Número de Parte Varía. Especifique los datos completos de compresor cuandoordenación.

Columna de Descripcion
Esta columna de descripción contiene el nombre del artículo estándar con modificadores. La relación de un artículo con su próximo ensamble más alto se muestra en esta columna por una indentación. Siempre incluir la descripción cuando ordenadora conjuntos o partes dereemplazo.

Columna de Cantidad Por Ensamble
Las cantidades especificadas en esta columna son el número de partes usadas por cada ensamble superior y no necesariamente son el número total de partes del modelo en general. Especifique la cantidad deseada cuando partes ordenadoras de reemplazo.

Como Seleccionar Repuestos Recomendados
Este catálogo contiene una lista de partes que está incluidas en cada una de las siguientes clases de repuestos recomendados:

CLASE 1 — MINIMA. Sugerida para uso doméstico donde interrupciones en la continuidad del servicio no son importantes.

CLASE 2 — PROMEDIO. Sugerida para servicio doméstico donde algunas interrupciones en la continuidad del servicio no son objetables.

CLASE 3 — MAXIMA. Sugerida para exportación o para servicio doméstico donde la interrupción en el servicio es objetable.

Conjuntos de Partes
Los conjuntos de Partes son disponibles para todos los compresors. Estosconjuntos se diseñan para proveer todas las partes usted necesitará desempeñarel mantenimiento de rutina y repara tareas. Una lista de Conjuntosdisponibles se incluye en el lista de partes que vino con su compresor. Cuando se ordenen repuestos recomendados o kits prácticos, siga el procedimiento descrito para partes del compresor.

INSTRUCCIONES DE ORDEN DE COMPRA

Todas las partes enumeraron en el Lista de Partes para su compresor son disponibles mediante su Air Center o Distribuidor de Servicio de INGERSOLL-RAND. Consulte el Directorio de Distribuidores incluyócon su compresor para ubicar el distribuidor en su área.

Cuando se ordenen repuestos, por favor especifique:

1. El MODELO y NUMERO DE SERIE como está impreso en la placa del compresor
2. El NUMERO DE FORMATO de la lista de partes.
3. La CANTIDAD, DESCRIPCIÓN y NUMERO DE PARTE exactamente como fue listado.

EJEMPLO

Envíe las siguientes partes para un modelo	7100
Número de Serie	T30000000
Número de formato de la literatura	SCD-478A
1 Interruptor, Presión	37005907
2 Elemento, Filtro	32012957
1 Manómetro	32013872

INDEX

SECTION I

GENERAL DESCRIPTION 4-6
- Application 6
- Intermittent Duty Formula 6

SECTION II

INSTALLATION AND START-UP RECOMMENDATIONS 7-9
- Location and Foundation 7
- Inlet Piping 7
- Baseplate-Mounted Compressor 7
- Low Oil Level Switch 8
- Magnetic Starter 8
- Electrical Wiring 8
- Fuses 9
- Discharge Piping 9
- Complete Warranty Registration 9

SECTION III

REGULATION 10
- Automatic Start and Stop Control 10
- Press Switch Adjustment 10
- Constant Speed Control 10
- Dual Control 10
- Intermittent Duty Formula 10

SECTION IV

OPERATION 11-14
- Operating Checks 11
- Compressor Lubrication 11
- Frame Oil Change 11
- Lubricating Oil Recommendations 11
- Motor Lubrication and Care 11
- Air Inlet Filter/Silencer 11
- Air-Cooled Intercooler 12
- Intercooler Pressure Chart 12
- Air-Cooled Aftercooler 12
- Safety Valve 13
- Starting Unloading System 13
- Pilot Valve Adjustment 14
- Breather Tube 14
- Oil Consumption Check 14

SECTION V

TROUBLE GUIDE 15

SECTION VI

MAINTENANCE 16-18
- Routine inspection And Service 16
- General 17
- Air Valve Cleaning 17
- Belt Installation and Adjustment 18
- Torque Values 18

SECTION VII

OPTIONAL EQUIPMENT AND ACCESSORIES 19
- Check Valve 19
- Automatic Condensate Drain Valve 19
- Timed Automatic Condensate Drain Valve 19
- High Pressure Air Receiver 19

SECTION VIII

PARTS LIST 20
- Step Saver Kits 20

SECTION IX

TYPICAL WIRING DIAGRAMS 21-22

SECTION I
GENERAL DESCRIPTION

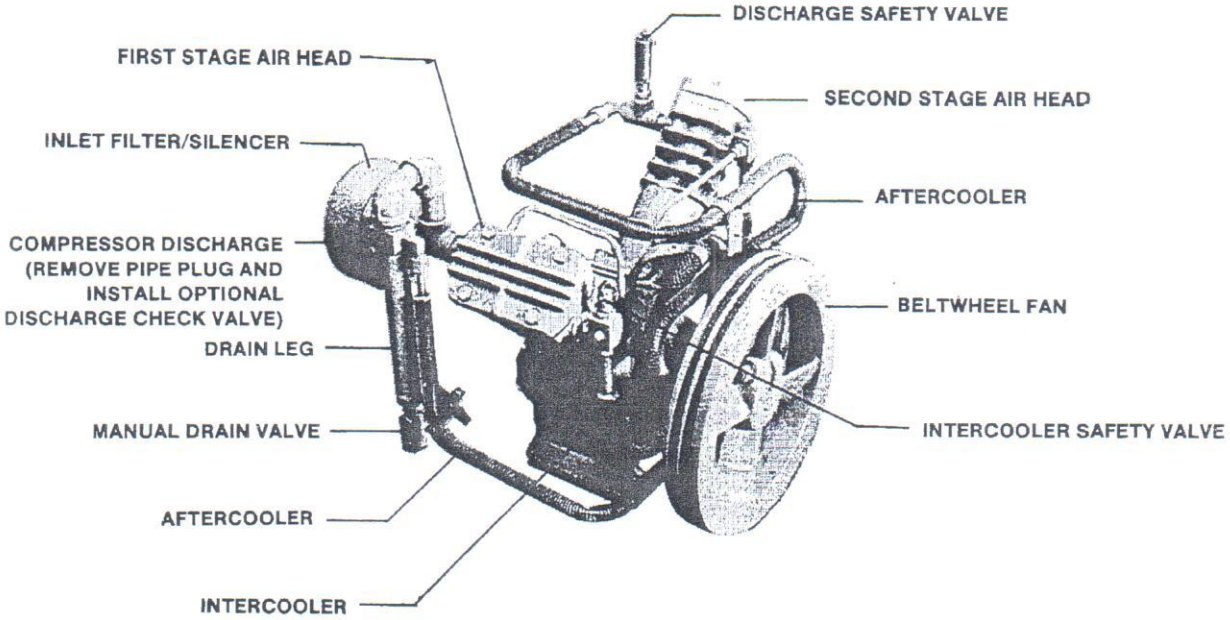

Figure 1-1. Model 231 Two-stage, two cylinder high-pressure air compressor.

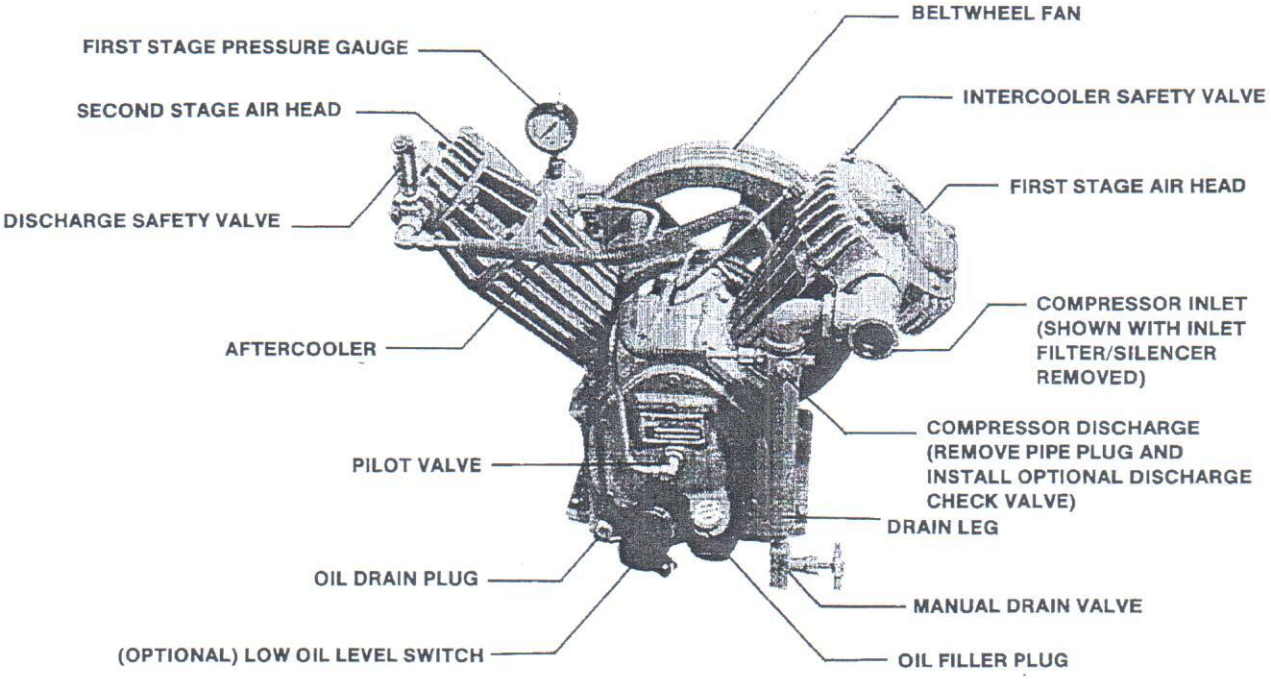

Figure 1-2. Model 41 Two-stage, two cylinder high-pressure air compressor.

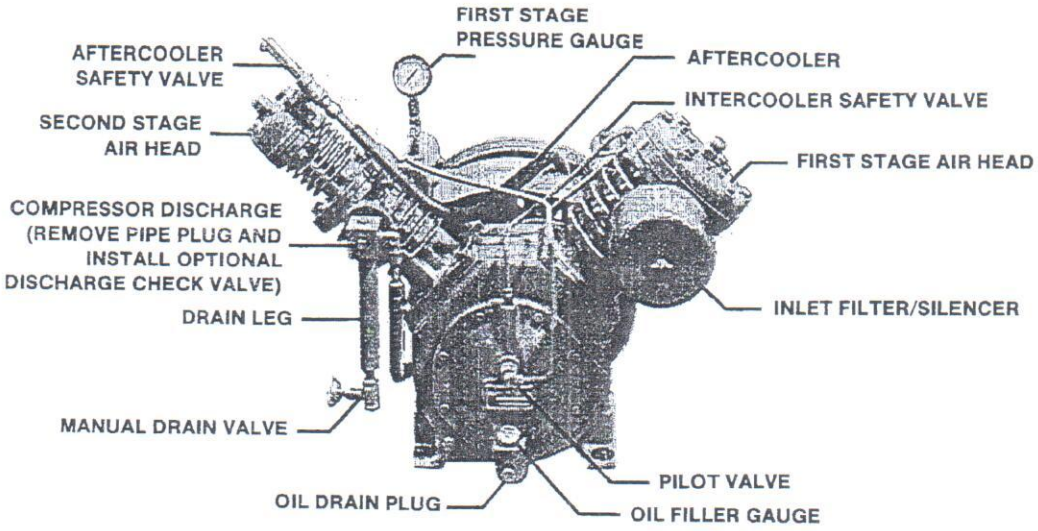

Figure 1-3. Model 7T2 Two-stage, two cylinder high-pressure air compressor.

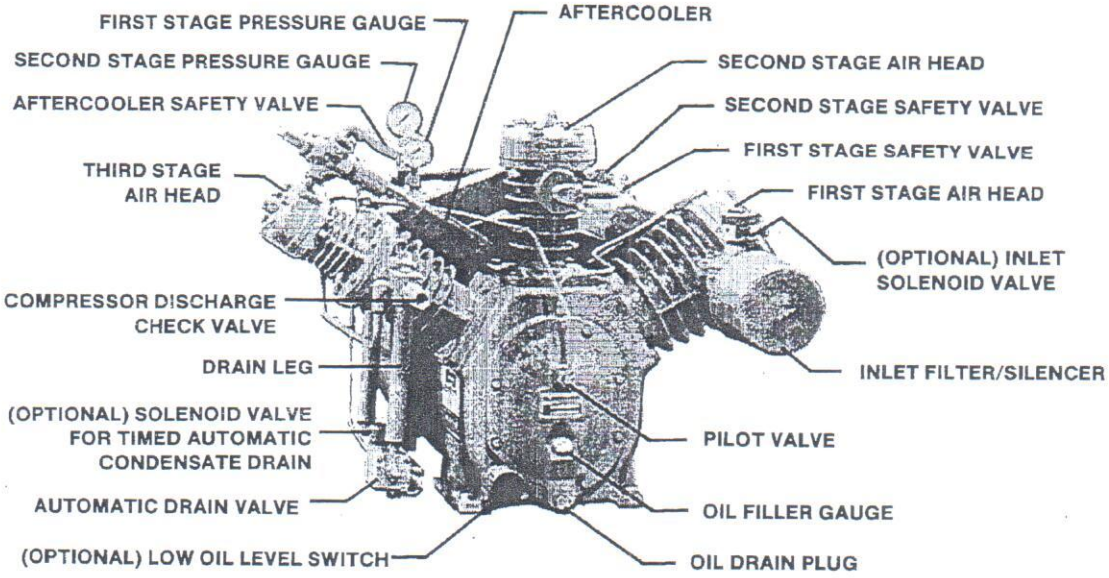

Figure 1-4. Model 15T2 Two-stage, three cylinder high-pressure air compressor.

APPLICATION

Ingersoll-Rand's Models 231 and 7T2 compressors are intended to supply air for applications requiring air pressure from 300 PSIG (21.2 kg/cm²) to 500 PSIG (35.2 kg/cm²). The Model 41 is intended to supply air pressure from 300 PSIG (21.1 kg/cm²) to 1000 PSIG (70.3 kg/cm²), and the Model 15T2 is intended to supply air pressure from 300 PSIG (21.1 kg/cm²) to 1000 PSIG (70.3 kg/cm²). The actual air delivery covers a range from 4.8 CFM (.135 m³/min) to 31.3 CFM (.886 m³/min).

The Models 231, 41, and 7T2 are compact, 2-stage, reciprocating compressors designed with properly proportioned compression ratios and efficient intercoolers to provide a dependable source of high pressure air.

The basic principle of operation is as follows: on the suction stroke of the first-stage piston, air at atmospheric pressure enters the first stage cylinder through the inlet filter and inlet valve. The compression stroke compresses this air to an intermediate pressure and discharges it through the discharge valve into the intercooler tubing where the heat of first-stage compression is removed by the action of the beltwheel fan passing cool air over the intercooler's finned tubes.

The suction stroke of the second-stage piston now draws the cooled air through the second-stage inlet valve and into the second-stage cylinder where it is compressed to a still higher pressure. On the compression stroke of the second stage, the air is compressed to its final pressure and forced out through the air cooled aftercooler and condensate separator into the external system.

The Model 15T2 is a compact, 3-stage, reciprocating compressor designed with properly proportioned compression ratios and efficient intercoolers to provide a dependable source of high pressure air.

The basic principle of operation is as follows: on the suction stroke of the first-stage piston, air at atmospheric pressure enters the first stage cylinder through the inlet filter and inlet valve. The compression stroke compresses this air to an intermediate pressure and discharges it through the discharge valve into the intercooler tubing where the heat of first-stage compression is removed by the action of the beltwheel fan passing cool air over the intercooler's finned tubes.

The suction stroke of the second-stage piston now draws the cooled air through the second-stage inlet valve and into the second-stage cylinder where it is compressed to a still higher pressure. On the compression stroke of the second stage, the air is forced into the third-stage steeple cylinder through the second-stage discharge valve, second-stage intercooler, condensate trap and third-stage inlet valve. On the compression stroke of the third-stage steeple piston, the air is compressed to its final pressure and forced out through the aircooled aftercooler and condensate separator into the external air system.

The finned tube intercoolers and aftercooler serve to dissipate heat from the compressed air, thus condensing contained moisture. This condensate is then separated and collected in suitably designed traps.

The compressors are equipped with a complete starting unloading system. This automatically relieves pressure from cylinders, intercoolers and the aftercooler, in addition to draining condensate from the traps, when the compressor stops.

INTERMITTENT DUTY FORMULA

Models operating above 200 psig (14 kg/sq. cm) are to be operated according to the "Intermittent Duty Formula."

INTERMITTENT DUTY FORMULA

Pump-up time should not ordinarily exceed thirty (30) minutes or be less than ten (10) minutes. Shut-down periods between cycles of operation should be at least equal to the pump-up time. Note: When the compressor is regulated by constant speed control, the shut-down period is the time the compressor is operating unloaded.

1. The formula is not to be regarded as a hard and fast rule.
2. A maximum operating time limit with a following cool down period is necessary to protect the valves and air heads against stabilized high operating temperatures, which could allow rapid valve carbonization.
3. A minimum operating time limit is required to prevent formulation of condensate which will cause rusting of cylinders, valves, and frame parts. Accumulation of condensate in the frame could give a false reading of oil level. Water and oil do not mix and their presence together cause rapid breakdown of the oil. The minimum time of operation should be long enough to allow the compressor to warm up sufficiently to evaporate condensated moisture.
4. When machine operation is too short for temperature to reach the normal level, a temperature control crankcase heater may be required. This is particularly true for areas of high humidity, such as along seacoasts.
5. All operating instructions should be read thoroughly and followed carefully by anyone operating these machines to give most efficient operation and longest possible machine life.

All inquiries for high-pressure compressor application where the "use" cycle differs from the "Intermittent Duty Formula" should be referred to the nearest Ingersoll-Rand branch office.

SECTION II
INSTALLATION AND START-UP RECOMMENDATIONS

Step. 1

Unload the compressor from delivering vehicle — the purchaser must arrange for adequate lifting equipment at the job site.

IMPORTANT NOTE: The purchaser assumes title to the compressor equipment at the manufacturers shipping dock. Immediately upon receipt of the equipment, it should be inspected for any damage that may have occurred during shipment. If damage is present, demand an inspection immediately by an inspector from the carrier. Ask him how to file a claim for damages.

Step. 2

Check compressor nameplate to be sure the unit is the model and size ordered. Do this before uncrating. Check receiver nameplate to be sure the tank is adequate for pressure at which you intend to operate.

Step 3.

Check motor nameplate to be sure motor is suitable for your electrical conditions (Volts-Phase-Hertz).

IMPORTANT NOTE: Do Not Use Triple Voltage 3 Phase Motor For 200-208 Voltage 3 Phase Application. Must Use 200 Volt Motor Only.

Step 4.
LOCATION & FOUNDATION

NOTE: Ideal ambient temperature is (70°F) (21°C).

In cold climates, it is desirable to install the compressor within a heated building. Choose a clean, relatively cool location, and provide ample space around the unit for cooling and general accessibility. Place the beltwheel side toward the wall, leaving at least 15" (380mm) for air circulation to the beltwheel fan. The location should also be near a source of water and a drain line to simplify piping connections if a water-cooled aftercooler is to be used. (Note: If a detached receiver is to be used, consider placing the receiver outdoors to provide more effective heat dissipation, keeping in mind that condensed water in the receiver may freeze).

A well ventilated location should be selected for this machine when operating in very damp climates or under conditions of high humidity. These atmospheric conditions are conducive to the formation of water in the crankcase, and if adequate operation and ventilation are not provided, rusting, oil sludging and rapid wear of running parts will result. This is particularly true when operating on very intermittent duty applications.

Provide adequate fresh air and exhaust ventilation from area in which the compressor is located. Provide 1,000 cu. ft. fresh air per minute per 5 horsepower. Ventilation by gravity or mechanical means is approved.

Step 5.
INLET PIPING

If the air in the vicinity of the compressor is unduly dirty or contains corrosive fumes, we recommend piping the air filter/silencer to a source of cleaner air or use an optional heavy duty filter. If it is found necessary to install inlet piping, make the line as short and direct as possible and as large, or larger than the diameter of the inlet connection at the compressor. The inlet piping must increase in diameter for every 50' (15.25m) of length. If the total length is between 50' (15.25m) and 100' (30.5m), increase the pipe diameter at the mid-point in the length, i.e., if the total length is 80' (24.4m), increase the pipe diameter at the 40' (12.2m) point. Attached the air filter/silencer to the end of the inlet air line, and if the inlet is piped outdoors, it should be hooded to prevent the entrance of rain or snow. See Figure 2-1. Fine airborne dust, such as cement and rock dust, require special filtration equipment not furnished as standard equipment on this compressor. Such filtration equipment is available from your local Ingersoll-Rand Distributor.

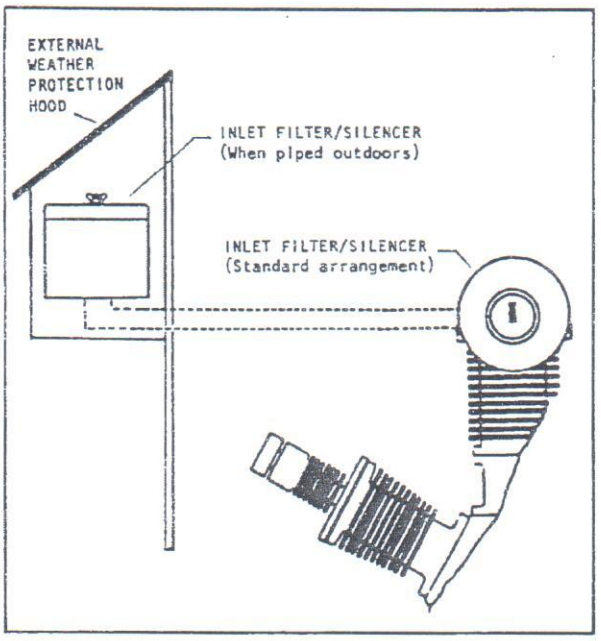

Figure 2-1. Typical Alternate Inlet Piping Arrangement.

Step 6.
BASEPLATE-MOUNTED COMPRESSOR

The baseplate may be bolted to any substantial, relatively level floor or base. If such a surface is not available, an adequate base must be constructed. Should a concrete base be necessary, make certain the foundation bolts are positioned correctly to accept the baseplate feet, and that these bolts project at least 1" (25.4 mm) above the surface of the foundation.

The baseplate must be levelled and bolted in a manner which avoids pre-stressing the baseplate in order to prevent vibration and insure proper operation. The following technique is recommended for anchoring the compressor to its base:

A. Tighten evenly, and to a moderate torque, the nuts of any three of the four baseplate feet, and check for level. If the baseplate is not level, insert metal shims under one or two of the feet to obtain level, and retighten the nuts.

B. Note-the distance the unanchored foot is elevated above the base and insert a metal shim of equal thickness under this foot to provide firm support. Shims must be at minimum the same dimension as bottom of foot.

C. After all shims are inserted and the baseplate is level, tighten the nuts on all baseplate feet to a moderate (not excessively tight) torque.

D. Check for baseplate stress by loosing nuts (one at a time), and note any upward movement of the mounting foot. Any noticeable movement indicates step B must be repeated.

Severe vibrations will result when nuts are pulled down tightly and feet are not level. This can lead to welds cracking or fatigue failure of baseplate. This is a very important part of installation.

THE COMPRESSOR SHOULD NEVER BE OPERATED WHILE MOUNTED TO THE SHIPPING CRATE SKID.

Step. 7
LOW OIL LEVEL SWITCH
(Optional Equipment)

A float activated switch can be installed to protect your compressor against damage due to insufficient oil level. The switch operates on a fail-safe principle and is mechanically actuated for sealed, friction-less operation. Low oil level in the frames causes the switch contacts to open, thus shutting the unit down until the proper oil level has been restored.

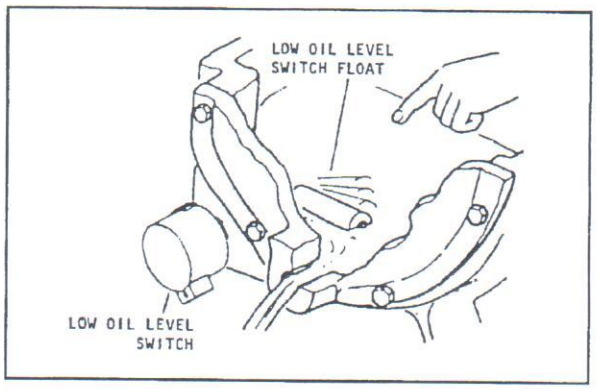

The Low Oil Level Switch is a single pole, double throw snap switch, available with an optional NEMA 1 or NEMA 7 enclosure. (See Wiring Diagram on Page 21 & 22 for connection of the Low Oil Level Switch.)

NEMA 1 ENCLOSURE: This switch has a maximum rating of 5 amps at 125,250 or 480 volt operation and uses a ⅜" nominal size flexible steel conduit, of a length as required, over the switch lead wires. The switch is not acceptable for greater than 480 volts.

NEMA 7 ENCLOSURE: This switch has a maximum rating of 4 amps at 250 volt operation and is equipped with a ½" NPT non-removable fitting.

⚠ WARNING

Hazardous voltage.

Connecting pressure switch or low oil level switch directly to motor can cause severe injury or death.

Always insure the pressure switch or low oil level switch is connected through the control circuit of a magnetic starter.

Proper protection against low oil levels depends on proper adjustment of the low oil level switch.

During the initial run, stop unit and drain one quart of oil from crankcase into clean can, and listen for switch to click or check with continuity tester.

This is a "float" type switch which sometimes gets cocked in shipping. If cocked or stuck, open disconnect switch, drain remaining oil, remove crankcase cover and then free the float. Reassemble and then reuse the same oil.

NOTE: If float is cocked in the low position, compressor cannot start.

Step 8.
MAGNETIC STARTER
(See Electrical Diagrams on Page 21 & 22).

This compressor must be equipped with an optional magnetic starter. Note-that the Pressure Switch, the Oil Level Switch and the On-Off Switch are wired to the operating coil of the magnetic starter and serves to interrupt current flow to the motor.

All starters must include thermal overload protection to prevent possible motor damage from overloading. These starters are furnished with the manufacturer's instructions for installation. Ingersoll-Rand cannot accept responsibility for damages arising from failure to provide adequate motor protection.

Step 9.
ELECTRICAL WIRING
(See Electrical Diagrams on Page 21 & 22).

To avoid invalidating your fire insurance, it is advisable to have the electrical work done by a licensed electrician who is familiar with the regulations of the National Electrical Code and the requirements of the local code.

Sizes of copper wire to use for distances up to 50 feet (15.3m) from the feeder—60 Hertz.

MOTOR HORSEPOWER	SINGLE PHASE	THREE PHASE—60HZ		
	230V AWG-(75°C)	200V AWG-(75°C)	230V AWG-(75°C)	460V-575V AWG-(75°C)
2	14	14	14	14
5	8	10	12	14
10	—	8	8	12
15		4	6	8

Sizes of copper wire to use for distances up to 50 feet (15.3 m) from the feeder—50 Hertz.

MOTOR HORSEPOWER	VOLTAGE—50 HZ				
	SINGLE PHASE	THREE PHASE			
	220V	190V	220V	360V	440V
2	10	12	14	14	14
5	6	8	10	12	14
10	—	4	6	8	10
15		3	4	6	8

The wire sizes recommended in the above table are suitable for the compressor unit. If other electrical equipment is connected to the same circuit, the total electrical load must be considered in selecting the proper wire sizes. A burned out motor due to low voltage may result unless it is properly protected.

Before wiring the compressor to the power supply, the electrical rating of the motor, as shown on the motor nameplate, must be checked against the electrical supply. If they are not the same, do not connect the motor.

It is important that the wire used be the proper size and all connections secured mechanically and electrically. The size of the wire shown in the table above is a safe guide.

If the distance is more than 50 feet (15.3 m), larger wire will probably be necessary and your electrical contractor or local electric company should be consulted for recommendations. The use of too small wire results in sluggish operation, unnecessary tripping of the overload relays or blown fuses.

Step 10.
FUSES

Fuse failure usually results from the use of fuses of insufficient capacity. If fuses are the correct size and still fail, check for conditions that cause local heating, such as bent, weak or corroded fuse clips. Refer to the table below for recommendations on the proper fuse size to be used. Also refer to the regulations of the National Electrical Code and requirements of the local code.

DUAL ELEMENT FUSE SIZE—60 HERTZ
UL CLASS RK-5 600V

MOTOR HORSEPOWER	VOLTAGE—60 HZ				
	SINGLE PHASE	THREE PHASE			
	230V	200V	230V	460V	575V
2	17.5	12	10	5.6	4.5
5	35	25	20	10	9
10	—	50	40	20	17.5
15		60	60	30	25

DUAL ELEMENT FUSE SIZE—50 HERTZ
UL CLASS RK-5 600V

MOTOR HORSEPOWER	VOLTAGE—50 HZ				
	SINGLE PHASE	THREE PHASE			
	220V	190V	220V	380V	440V
2	25	17.5	15	8	6.25
5	50	40	35	17.5	15
10	—	75	60	35	30
15		90	80	45	40

Step 11.
DISCHARGE PIPING

The following general instructions cover only the installation of discharge piping and placement of safety valves, pressure switch, pressure gauge, drain valves, shut-off valves, etc. in systems using a detached receiver. See Figure 2-2. Discharge piping should be the same size as the compressor discharge connection or the receiver discharge connection. All pipe and fittings must be certified safe for the pressures involved. Pipe thread sealant is to be used on all threads, and all joints are to be made up tightly, since small leaks in the discharge system are the largest single cause of high operating costs. If your compressor runs more than you believe it should, the most likely cause is a leaky pipe line. Leaks are easily located by squirting soap and water solution around the joints and watching for bubbles.

Figure 2-2 is a typical installation for a bare compressor connected to an air receiver. Refer to Figure 2-2 and observe the following precautions when installing the discharge line and the high pressure air receiver.

A The compressor discharge line may be high pressure tubing or pipe. The minimum size to use for maximum capacity for your particular model is as indicated below: Models 231 and 41 use a minimum 1/4" (6.35mm) I.D., Model 7T2 use a minimum 3/8" (9.5mm) I.D., and Model 15T2 use a minimum 1/2" (12.7mm) I.D.

The discharge line, fitting, high pressure air receiver, etc. must be certified safe for the pressure involved.

B. The line is to be short, direct and adequately braced. It is a good practice to install a shut off valve between the compressor discharge and the high pressure air receiver, and also between the high pressure air receiver and the point at which the air is used. Always install a high pressure ASME approved safety valve between the shutoff valve & the air bottle.

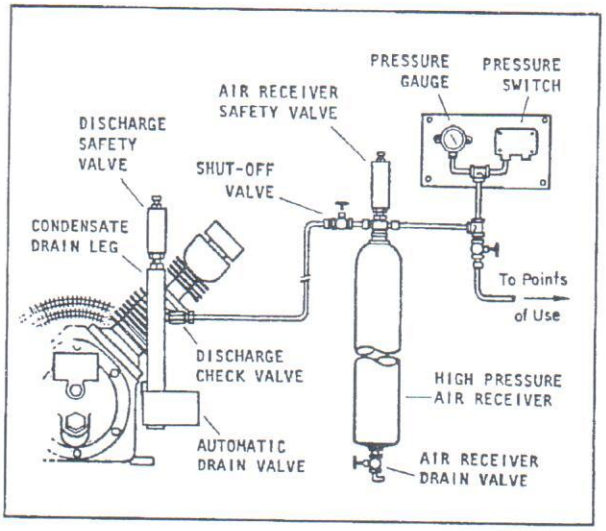

Figure 2-2. Typical piping arrangement for compressor and detached receiver.

C. Install the pressure switch and gauge at a pulsation free point in the system that registers actual air receiver pressure. Select a high point where condensate will not accumulate. The pressure switch may be mounted in any position, but both it and the gauge must be securely mounted against a solid surface. The connecting line is to be short and direct and certified safe for the pressure involved.

Wire the pressure switch according to the schematic diagram on page 21 & 22.

D. The compressor automatic drain valve discharge may be piped outdoors or to a suitable open drain. The drain pipe or tubing must be as large or larger than the drain fitting, and must be firmly secured.

⚠ WARNING

This machine contains high pressure air. Can cause injury or death from flying parts.

If an aftercooler, check valve, block valve, or any other restriction is added to the compressor discharge, an ASME approved safety valve must be installed between the compressor discharge and the restriction.

Step 12.
COMPLETE WARRANTY REGISTRATION

Completion of the registration form indicates satisfactory installation and performance of start-up operations. If any defects are apparent in the equipment; contact the nearest I-R Distributor or Ingersoll-Rand District office. The I-R service literature included with the unit has instructions for minor adjustments. Minor adjustments are not considered warranty.

SECTION III
REGULATION

AUTOMATIC START AND STOP CONTROL

This type of regulation is used when the demand for air is small or intermittent, but where pressure must be continuously maintained.

Automatic Start and Stop Control is obtained by means of a pressure switch which makes or breaks an electrical circuit, starting and stopping the driving motor, thereby maintaining the air receiver pressure within definite limits. The pressure switch is piped to the receiver and is actuated by changes in air receiver pressure.

Automatic Start and Stop should only be used when motor starts no more than 6-8 times per hour.

PRESSURE SWITCH ADJUSTMENT

(Also see instructions furnished with switch).

The pressure switch automatically regulates the compressor, starting and stopping the driving motor at specific receiver pressures.

The range adjustment is used to set the operating point on the decreasing pressure and must be set first. To increase the operating point on decreasing pressure, with the switch mounted as shown in the illustration below and facing the switch, place a screw driver in the slot on the Range Adjustment Nut and turn from right to left.

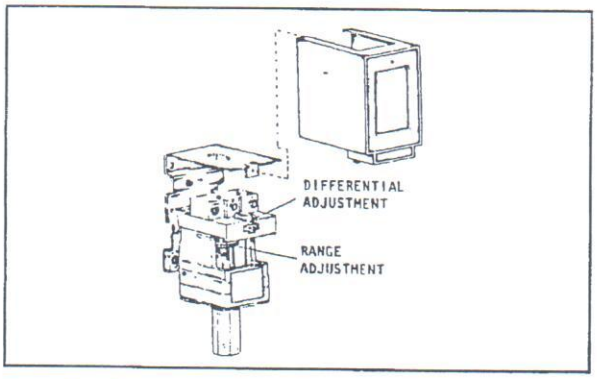

Figure 3-1. Pressure Switch Adjustment.

An independent adjustment of the operating point on increasing pressure is available on the adjustable differential. The adjustment, located in the center of the switch, (See Figure 3-1) is performed after the operating point on decreasing pressure is set by means of the Range Adjustment.

Adjust by turning the slotted screw clockwise to raise the operating point on increasing pressure and counter-clockwise to lower the operating point on increasing pressure. The operating point on decreasing pressure is not affected by this adjustment.

⚠ WARNING

This machine contains high pressure air. Can cause injury or death from flying parts.

Do not increase the cut-out setting of the pressure switch beyond the point originally established at the factory for your particular model.

CONSTANT SPEED CONTROL

Constant speed control loads and unloads the compressor while the compressor continues to run. The solenoid valve, located at the compressor inlet, controls this operation according to the rise and fall of the air receiver pressure. When the air pressure in the air receiver (bottle) reaches the pressure setting of the pressure switch, the pressure switch breaks electrical contacts, therefore interrupting the current flow to the inlet solenoid valve. This action causes the solenoid valve to close the compressor inlet and permits the compressor to run continuous without compressing air.

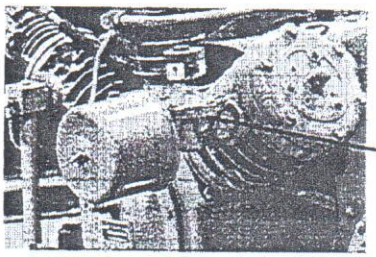

Figure 3-2. Typical Constant speed control inlet solenoid valve arrangement. (Supplied with optional constant speed control).

DUAL CONTROL

Dual control is the combination of both automatic start and stop and constant speed control operation. All models that require constant control operation will be shipped with the dual control option.

INTERMITTENT DUTY FORMULA

(Also see Page 6.)

Compressors operating above 200 psig (14 kg/sq. cm) are to be operated according to the "Intermittent Duty Formula."

INTERMITTENT DUTY FORMULA

Pump-up time should not ordinarily exceed thirty (30) minutes or be less than ten (10) minutes. Shut-down periods between cycles of operation should be at least equal to the pump-up time. Note: When the compressor is regulated by constant speed control, the shut-down period is the time the compressor is operating unloaded.

A pump-up time limit with the following cool-down period is recommended to protect the valves and heads against stabilized high operating temperatures, which could rapidly build up carbon in these areas.

All inquiries for high-pressure compressor application where the "use" cycle differs from the "Intermittent Duty Formula" should be referred to the nearest Ingersoll-Rand branch office.

SECTION IV
OPERATION

OPERATING CHECKS

Satisfactory operation of any piece of mechanical equipment depends, to a large degree, upon adherence to a preventive maintenance schedule.

To obtain optimum performance at minimum cost, observe the "Maintenance" guide on page 16.

COMPRESSOR LUBRICATION

Check the oil level in the bare compressor before each use by removing the oil filler plug and wiping clean. For Models 231 and 41, the oil should be level with the top thread of the oil filler hole. For Models 7T2 and 15T2, place the oil gauge with the writing up into the filler hole until the threads touch (DO NOT ENGAGE THE THREADS.) Remove the gauge and read the oil level. If oil level drops below the safe point, add oil to bring level back to the FULL mark. Do not over fill. Replace oil plug HAND TIGHTEN ONLY.

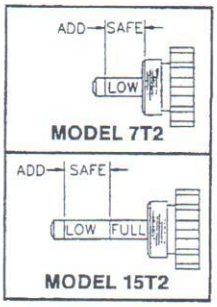

FRAME OIL CHANGE

Oil changes should be made every 500 hours of operation or every 90 days, whichever occurs first. Important: For maximum removal of impurities, drain only when frame oil is hot. After the operator has observed the condition of the oil from a number of changes, the length of time between changes may be extended if so warranted. Frame oil capacities are as follows: Model 231 — ⅞ Qt. (0.83 Liters). Model 41 — 2½ Qts. (2.37 Liters). Model 7T2 — 2½ Qts. (2.37 Liters). Model 15T2 — 5 Qts. (4.73 Liters).

⚠ WARNING

Flushing compressor frame with gasoline, kerosene or flammable fluid can cause severe injury or death.

Use a regular flushing oil to flush out compressor frame.

LUBRICATING OIL RECOMMENDATIONS

Ingersoll-Rand does not recommend any particular brand of oil, but a petroleum lubricating oil is preferred in this particular type of air compressor. The petroleum lubricating oil should be a non-detergent, containing only rust, oxidation, and anti-foaming inhibitors with either a naphthenic or paraffinic base.

The viscosity should be selected for the temperature immediately surrounding the unit when it is in operation.

OIL VISCOSITY TABLE

Temp. Range	Viscosity at 100°F (37.8°C)	
	SUS	Centistokes
40°F & Below (4.4°C & Below)	150	32
40°F & 80°F (4.4°C to 26.7°C)	500	110
80°F to 125°F (26.7° to 51.7°C)	750	165

The viscosities given in the table are intended as a general guide only. Heavy-duty operating conditions require heavier viscosities, and where borderline temperature conditions are encountered the viscosity index of the oil should be considered. Always refer your specific operating conditions to your industrial lubricant supplier for recommendations.

MOTOR LUBRICATION & CARE

Depending upon the type of electric motor driving your unit, the following lubricating schedule should be observed.

BALL BEARING MOTORS WITH GREASE FITTINGS - Ball bearing motors that have grease fittings and plugs near the bearings are to be repacked with grease once a year. Use a very good grade of ball bearing grease.

BALL BEARING MOTORS PRELUBRICATED FOR LIFE - These motors have no grease fitting or plugs near the bearing and do not require lubrication.

Several major points contributing to proper motor operation and care are given in the following paragraphs. For more detailed instructions, refer to the manufacturers' specific recommendations.

It is also a good practice to monthly blow off the motor windings with a jet of air to prevent an accumulation of dirt. An occasional revarnishing of the windings will greatly prolong the life of the motor.

If the motor is located in an atmosphere where it is exposed to appreciable quantities of water, oil, dirt or fumes, it must be specially constructed.

AIR INLET FILTER/SILENCER

It is very important that the air inlet filter/silencer be kept clean at all times. A dirty inlet filter reduces the capacity of the compressor.

⚠ WARNING

Cleaning air inlet filter with gasoline, kerosene or flammable fluid can cause an explosion or fire which can result in severe injury or death.

Use warm soapy water for cleaning air inlet filter.

The filtering element should be taken out at least once a month and cleaned by vacuuming or washing in mild detergent and water. Allow to dry and then reinstall.

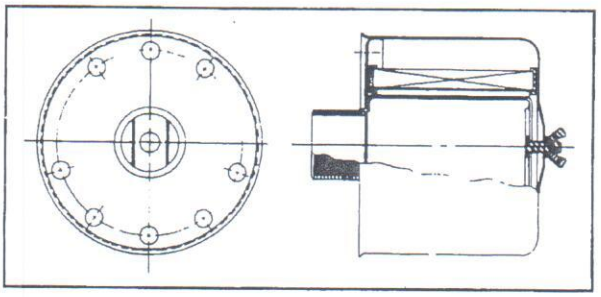

Figure 4-1. Typical Air Inlet Filter/Silencer.

The standard air inlet filter is suitable only for normal industrial applications. Should the compressor be located in an area where the atmosphere contains a heavy concentration of dust and dirt, an air filter utilizing a specially designed, heavy duty (4 micron) element should be used.

All applications of this nature should be referred to the nearest Ingersoll-Rand sales office or distributor.

AIRCOOLED INTERCOOLER

An aircooled intercooler is located between each stage of compression to remove the heat of the previous stage of compression before the air enters the next higher compression stage.

Never permit the air flow to these tubes to become obstructed, and clean the surfaces of the tubes whenever deposits of oil, dirt or grease are observed. Use a non-flammable safety solvent for cleaning purposes. During regular overhaul periods, the tubes should be removed from their headers and inspected internally. If the interior of the tubes requires cleaning, cap one end and fill it with a non-flammable safety solvent to help loosen internal deposits of oil, dirt and carbon. Always flush the tubes with warm water and permit them to dry thoroughly before replacing.

Two-stage compressors have one intercooler located between the discharge of the first-stage and the intake to the second-tage.

Three-stage compressors have two intercoolers, one located between the discharge of the first-stage and the intake to the second-stage cylinder, and the second intercooler located between the discharge of the second-stage and the intake to the third-stage cylinder.

⚠ WARNING

This machine contains high pressure air. Can cause injury or death from flying parts.

Do not open an intercooler drain valve while the compressor is running.

When necessary, the intercooler will be fitted with a condensate drain leg and valve. When these valves are provided, the condensate should be drained off at periodic intervals.

The intercooler gauge pressures are a true indication as to the correct operation of the compressor. The cooler pressure will vary with individual machines, with operating temperatures, and with elevation above sea level. Note the pressure when the machine is new, and any marked deviation thereafter requires investigation of the cause; thus, possible troubles may be discovered before serious damage results.

If the intercooler pressure is abnormally high, one or more of the following conditions may be present in the next stage of compression.

1. Inlet or discharge valve broken, stuck or leaking badly.
2. Inlet or discharge valve spring broken or weakened enough to allow air "slip."
3. Carbonized valves or passages which restrict air flow.
4. Air leaking past valve seat.

If the intercooler pressure is abnormally low, one or more of the following conditions may be present in either preceding stage of compression.

1. Piston rings broken or stuck in grooves.
2. Head gasket blown or head not bolted tightly to cylinder.
3. Inlet valve leaking or stuck, spring broken or weakened.
4. Discharge valve broken, stuck or leaking.
5. Leaks in intercooler around the tube fittings or a cracked and leaking tube.

INTERCOOLER PRESSURE CHART

Due to variable operating conditions, the pressure listed in the chart may not be identical to the intercooler pressure read on your unit. In this case, it is recommended that the intercooler pressure be recorded when the machine is new, and this reading should be used as the normal intercooler pressure.

Model	Discharge Pressure	1st Stage Intercooler	2nd Stage Intercooler
231	500 PSIG (34.48 Bar)	78 to 82 PSIG (5.38 to 5.65 Bar)	
41	500 PSIG (34.48 Bar)	80 to 85 PSIG (5.52 to 5.86 Bar)	
	800 PSIG (55.16 Bar)	89 to 93 PSIG (6.14 to 6.41 Bar)	
	1000 PSIG (68.95 Bar)	94 to 98 PSIG (6.48 to 6.76 Bar)	
7T2	500 PSIG (34.48 Bar)	68 to 78 PSIG (4.69 to 5.38 Bar)	
15T2	500 PSIG (34.48 Bar)	35 to 37 PSIG (2.41 to 2.55 Bar)	165 to 180 PSIG (11.38 to 12.41 Bar)
	750 PSIG (51.71 Bar)	37 to 39 PSIG (2.55 to 2.69 Bar)	180 to 200 PSIG (12.41 to 13.79 Bar)
	1000 PSIG (68.95 Bar)	38 to 41 PSIG (2.62 to 2.83 Bar)	215 to 240 PSIG (14.82 to 16.55 Bar)

AIR-COOLED AFTERCOOLERS

Compressor models 231, 41, 7T2, and 15T2 are equipped with an air-cooled aftercooler, which resemble the intercooler's finned tubes. The aftercooler functions to remove the heat of compression from the final discharge air before it is stored in the receiver.

Do not permit the air flow to the fan-belt wheel to become obstructed, and keep the aftercooler tubes and fins free from dust and dirt. The aftercooler condensate drain trap should be drained as frequently as necessary to prevent condensate water from entering the compressor.

SAFETY VALVE

A safety valve is provided in each intercooler. If an intercooler safety valve blows, and continues to blow for more than a minute, the compressor should be stopped at once. It indicates a leaky, broken or carbonized discharge valve in the next higher pressure cylinder.

A discharge safety valve is furnished as standard equipment on all models. See safety valve chart below:

SAFETY VALVE SETTING PSIG (Bar)

MODEL	DISCHARGE	FIRST-STAGE INTERCOOLER	SECOND-STAGE INTERCOOLER
231	800 PSIG (55.2 Bar)	125 PSIG (8.6 Bar)	———
41	1300 PSIG (89.6 Bar)	160 PSIG (11.0 Bar)	———
7T2	800 PSIG (55.2 Bar)	160 PSIG (11.0 Bar)	———
15T2	1300 PSIG (89.6 Bar)	80 PSIG (5.5 Bar)	260 PSIG (17.9 Bar)

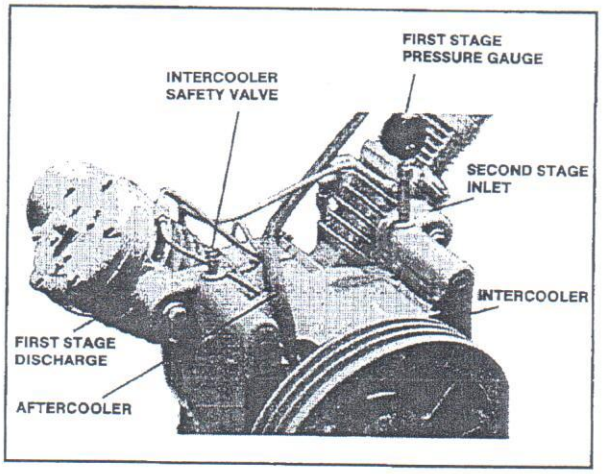

Figure 4-2. Typical Intercooler Tubes and Safety Valves.

⚠ WARNING

This machine contains high pressure air. Can cause injury or death from flying parts.

Do not remove, change, or make substitutions for the safety valves. They should be replaced only by genuine I-R replacement parts.

STARTING UNLOADING SYSTEM

OPERATION OF STARTING UNLOADING SYSTEM — The purpose of the system is to relieve cylinder pressure when the compressor stops permitting it to start against a light load, increasing the life of the driver and belts and also reducing the possibility of tripping the overload relay. The system operates in the following manner:

As shown in Figure 4-3 & Figure 4-4, the centrifugal unloader is attached to the end of the crankshaft, thus when the compressor is in operation, centrifugal force acts upon the unloader weights and they swing outward. (See Figure 4-5 and Figure 4-6). When the compressor stops, these weights retract. (Figure 4-3 and Figure 4-4) permitting the thrust pin spring to move the plunger and thrust pin outward. The thrust pin opens the pilot valve and the trapped air pressure escapes from the cylinder and intercooler through a passage in the frame end cover (See Figure 4-6), through the unloader tube and to atmosphere through the inlet filter/silencer.

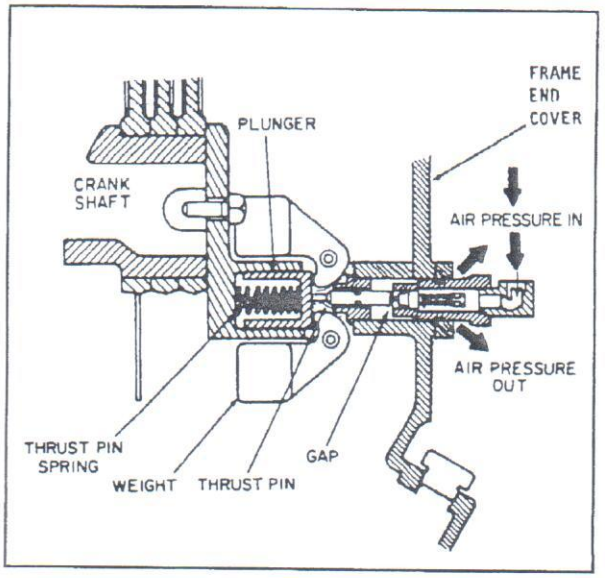

Figure 4-3. Position of weight and thrust pin when compressor is stopped. (Models 231, 41).

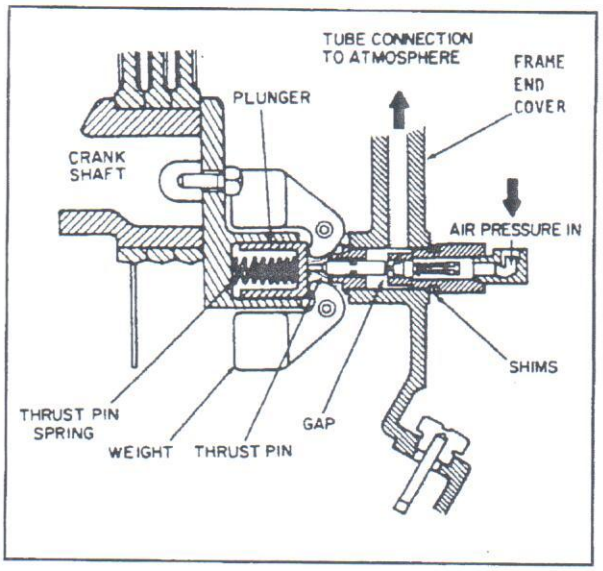

Figure 4-4. Position of weight and thrust pin when compressor is stopped. (Models 7T2, 15T2).

When the compressor starts, centrifugal force acts upon the unloader weights and they swing outward. This permits the plunger and thrust pin to move inward and the pilot valve to close. The escape path to atmosphere for the cylinder pressure is now closed and the compressor pumps air in a normal manner.

If the pilot valve tube line is excessively hot, it is a good indication that the pilot valve is leaking and adjustment is required.

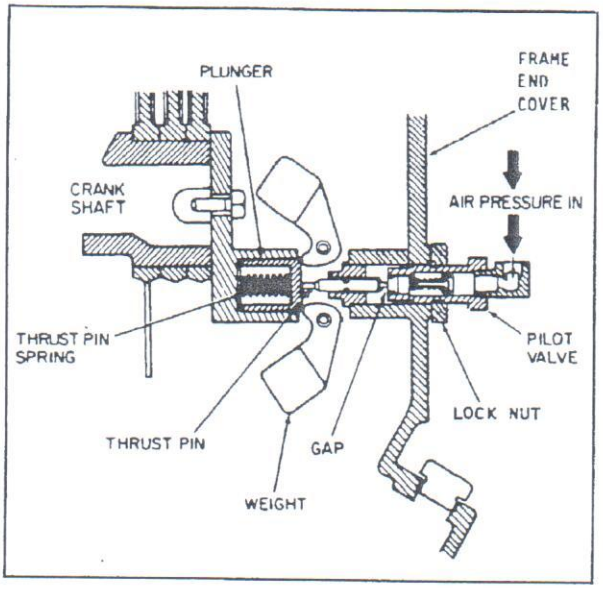

Figure 4-5. Position of weight and thrust pin when compressor is operating. (Models 231, 41).

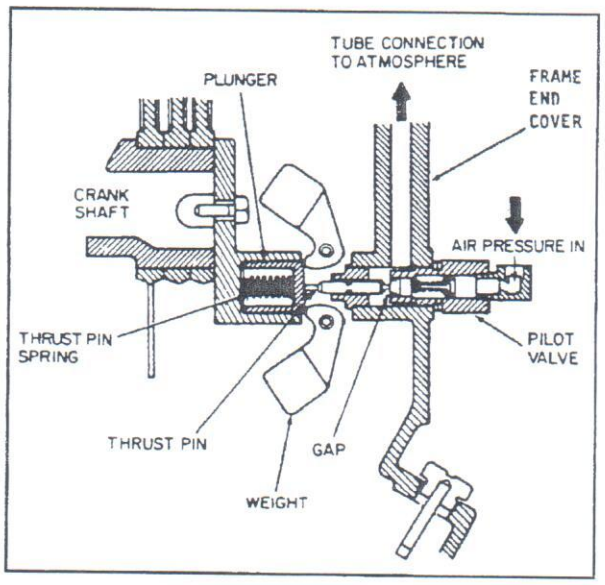

Figure 4-6. Position of weight and thrust pin when compressor is operating. (Models 7T2, 15T2).

PILOT VALVE ADJUSTMENT

To adjust the pilot valve, refer to Figures 4-3 and 4-5 for Models 231 and 41, and proceed as follows:

1. Stop the compressor. (Disconnect the electrical supply main switch to prevent accidental start-up.)
2. Remove the pilot valve tube, fittings, and loosen lock nut.
3. Screw pilot valve assembly into frame end cover until thrust pin is felt. Advance valve assembly to ¼ to ½ turn.
4. Hold valve assembly at this position and tighten lock nut.
5. Reconnect pilot valve tubing and start the compressor. Place hand over front side of lock nut.
6. If there is no flow of air, pilot valve is adjusted properly. If air flow is evident, re-adjust valve starting with step (1).

To adjust the pilot valve, refer to Figures 4-4 and 4-6 for Models 7T2 and 15T2, and proceed as follows:

1. Stop the compressor. (Disconnect the electrical supply main switch to prevent accidental start-up.)
2. Remove the pilot valve tube and the tube fittings.
3. Remove the pilot valve body and all existing shims.
4. Screw the pilot valve body back into the frame end cover (without any shims) until contact with the thrust pin is felt. Advance the pilot valve body ¼ to ½ turn more.

If contact with the thrust pin cannot be felt, the following steps may be necessary to locate the contact point.

1. Insert a small instrument (Punch, rod, nail, etc.) into the end of the pilot valve until it contacts the valve stem.
2. While still inserted in the pilot valve, make a mark on the instrument even with the outside edge of the pilot valve body.
3. Keeping the instrument pressed lightly against the valve stem, screw the pilot valve body into the frame end cover. When the mark on the instrument starts moving out away from the edge of the pilot valve body, contact has been made with the thrust pin.
4. Advance the pilot valve body ¼ to ½ turn more and proceed with step five.
5. Measure the gap between the pilot valve body and the frame end cover. (See Figure 4-4).
6. Remove the pilot valve body and add enough shims to fill the gap measured in step five.
7. Screw the pilot valve body back into the frame end cover until the body is tight on the shims.
8. Reconnect the pilot valve tube and tube fittings.

If leakage still exists repeat the above steps. If leaking cannot be stopped by adjustment, replacement of the pilot valve may be required. Use the above procedure when installing the new pilot valve.

BREATHER TUBE

The breather tube connects the interior of the frame to the inboard side of the inlet filter/silencer. This connection permits pulsations, created by the reciprocating action of the pistons, to be vented to atmosphere, thus preventing any pressure build up within the frame.

OIL CONSUMPTION CHECK

A rule of thumb for determining a "passing grade" for oil consumption is to consider consumption at or above 25 horsepower-hours per ounce to be acceptable.

To apply this rule, consider the size of machine; say a 5 hp unit uses 2 ounces of oil every 10 hours of operation. Five (5) hp x 10 hours equals 50 horsepower hours, divided by 2, equals 25 horsepower hours per ounce.

$$\frac{\text{Motor Horsepower} \times \text{Hours of Operation}}{\text{Ounces of Oil Used}} = \text{Horsepower Hours per Ounce}$$

Machines using more than one (1) ounce of oil per 25 horsepower-hours would be classed as not meeting commercial standards, and further corrective action is recommended.

SECTION V
TROUBLE GUIDE

TROUBLE	CHECK POINT NUMBERS
Oil Pumping	1-6-8-10-17-21-22
Knocks or rattles	4-16-18-20-22-23-24
Air delivery has dropped off	1-5-17-18-19-21-22-35
Safety valve pops	18-19-33
Trips motor overload or draws excessive current	7-13-14-15-16-18-19-22-23-25-26
Water in frame or rusting in cylinders	2-10-11
Excessive starting and stopping (Auto Start and Stop Models)	2-5-12
Compressor doesn't unload when stopped	18-19-31-32
Condensate drain trap will not drain automatically	19-31-32
Compressor runs excessively hot	2-3-9-18-27
Compressor won't come up to speed	13-19-26
Light flicker when compressor runs	13-14-26
Abnormal piston, ring or cylinder wear	6-7-9-10-26-28
Air and/or condensate leaking from automatic drain valve	29-30-31-32
Unit very noisy when operated	4-18-19

CHECK POINT NUMBERS/TROUBLE CAUSE

1. Clogged Intake Filter.
2. Leaking Check Valve.
3. Air to fan blocked off or fan shroud not in place.
4. Loose beltwheel, motor pulley, or motor with excessive end play in shaft.
5. Air leak in piping on machine or in outside system.
6. Oil viscosity too low.
7. Oil viscosity too high.
8. Oil level too high.
9. Oil level too low.
10. Detergent type oil being used. Change to non-detergent type with rust and oxidation inhibitor.
11. Extremely light duty or located in a damp humid spot.
12. Readjust pressure switch setting. (Increase differential)
13. Check line voltage, motor terminals for good contact, tight starter connections, proper starter heaters.
14. Poor power regulation (unbalanced line). Consult power company.
15. V-Belt pulled excessively tight.
16. Loose motor fan.
17. Defective inlet solenoid valve.
18. Leaking, broken, carbonized or loose valves, or restricted air passages.
19. Automatic condensate drain valve defective.
20. Carbon on top of piston.
21. Piston rings broken or not sealed in, end gaps not staggered, stuck in grooves, rough, scratched, or excessive end gap (over .020" worn) (.508 mm) or side clearance (over .006%) (.152 mm).
22. Cylinder or pistons scratched, worn or scored.
23. Worn or scored connecting rod, piston, piston pin or crankpin bearings.
24. Defective ball bearing on crankshaft or on motor shaft.
25. R.P.M. too high. Check with tachometer and refer to motor nameplate for correct r.p.m.
26. Voltage too low. Check with voltmeter and refer to motor nameplace for correct voltage.
27. Wrong direction of rotation.
28. Extremely dusty atmosphere. Need more effective air inlet muffler and cleaner.
29. Ruptured seat diaphragm in automatic condensate valve.
30. Actuating piston in automatic drain valve sticking.
31. Lubricate automatic drain valve piston o-ring.
32. Defective condensate solenoid valve.
33. Defective condensate solenoid valve timer.
34. Defective safety valve.
35. Defective inlet solenoid valve.

SECTION VI
MAINTENANCE

⚠ WARNING

This machine contains high pressure air.
Can cause injury or death from flying parts.

Always release pressure from compressor and air receiver before removing caps, plugs, fittings, covers; etc.

⚠ WARNING

Hazardous voltage.
Can cause severe injury or death.

Disconnect main power before servicing compressor.

MAINTENANCE OPERATION	SERVICE INTERVAL				
	Operating Hours/Months - whichever comes first				
	500/3	1000/6	1500/9	2000/12	2500/15
COMPRESSOR					
Frame Oil Level - Check	Daily				
Air Inlet Filter - Inspect and Clean	Monthly (Weekly in Dusty Locations)				
Inspect Oil for Contamination —Change if necessary	Monthly				
Frame Oil—Change Petroleum Lube	X	X	X	X	X
Automatic Drain Valve Piston O-Ring —Lubricant O-Ring with Lubricant capable of 200°F	X	X	X	X	X
Compressor Valves - Inspect, Clean or Replace				X	
Intercooler Clean Exterior	Monthly				
Low Oil Level Switch - Check Operation	X	X	X	X	X
Operate Safety Valves - Manually	Monthly				
Clean Cylinder Cooling Fins	Monthly				
V-BELT DRIVE					
Belt Tension - Check	Monthly				
MOTOR					
Motor Bearings - Check and Lubricate				X	
Clean	Monthly—(Weekly in Dusty Locations)				
AFTERCOOLER					
Aircooled: Clean externally	Monthly — (Weekly in Dusty Locations)				
Clean air flow internally				X	
RECEIVER					
Drain Condensate - Manual	Daily				
Operate Safety Valves	Monthly				
GENERAL					
Tighten or check all bolts (retorque)	Monthly				
Check for Unusual Noise and Vibration	Daily				
Inspect for Air Leaks	Monthly				

GENERAL

The maintenance section of this book covers only those operations with which maintenance personnel may not be too familiar. It is expected that the average mechanic's training and experience will permit him to perform the more common maintenance functions without the need for detailed instructions.

AIR VALVE CLEANING
(Model 231)

Ingersoll-Rand stainless steel finger valves are quick-acting, durable, realiable and easily serviced. Valves are readily accessible and may be removed without disturbing piping. See Figure 6-1.

To clean the valves, take out the air head cap screws and remove the head and valve plate from the cylinder. Remove the valves from the valve plate and clean both the valve and seat by brushing with a stiff bristle brush (not wire). If necessary, use a non-flammable safety solvent to loosen dirt, oil or carbon deposits. Should it be necessary to scrape, do so lightly to prevent marring the valve or seating surface.

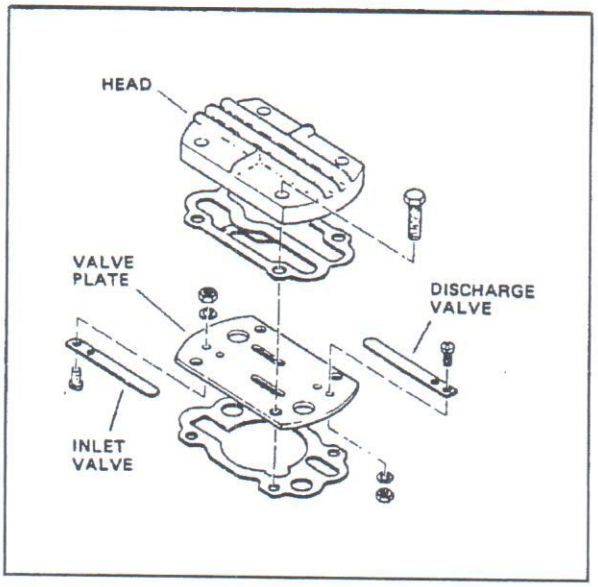

Figure 6-1. Finger Valves

Handle the valves with care and be careful not to nick or scratch them. When replacing a valve, make certain it will lie flat against the seating surface surround the port hole; otherwise, the valves will leak air, resulting in carbonization and reduced compressor output.

AIR VALVE CLEANING
(Model 41)

To clean these valves, first remove the valve cap's cap screws. Unscrew the valve cage, thus exposing the valve assembly. Lift the valve from its seat, using extreme care not to damage the seating surfaces. See Figure 6-2.

If necessary to take the valve apart to get it clean, be careful not to damage the valve seat by holding it in a vise or wrench. A good way to hold the valve while turning off the valve stud nut is to clamp in a vise a pair steel pins about the same diameter as the port holes in the valve. These pins should be spaced so they will enter the valve ports and prevent the valve from turning when removing the nut.

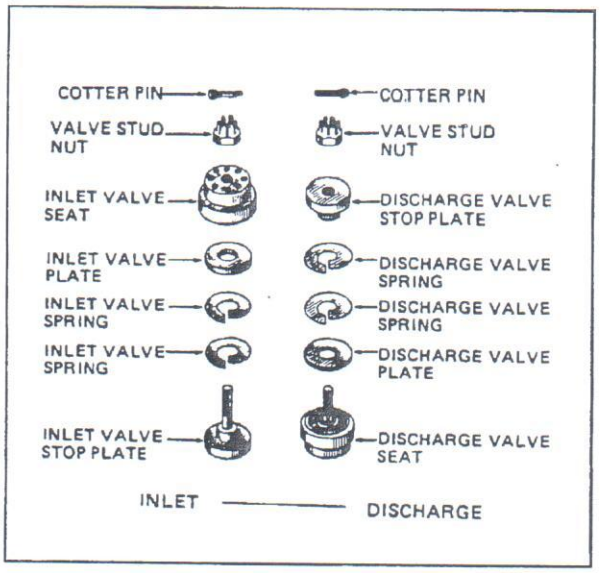

Figure 6-2. Plate Type Valves

AIR VALVE CLEANING
(Models 7T2 and 15T2)

To remove and clean a concentric ring valve, observe the following step-by-step procedure:

1. If the air heads are equipped with unloaders, disconnect the tubing to the unloaders, remove the unloader capscrews and lift the unloaders off the air head.
2. Loosen the valve acorn nuts, then take out the air head capscrews and remove the air head from the cylinder.
3. The valve itself may now be disassembled. To facilitate the valve disassembly, screw two bolts part way into the tow threaded ports located in the valve seat. Clamp these bolts firmly in a wise and remove the locknut and hex nut. Note-the manner in which the valve parts are assembled and replace them in the same order and position.

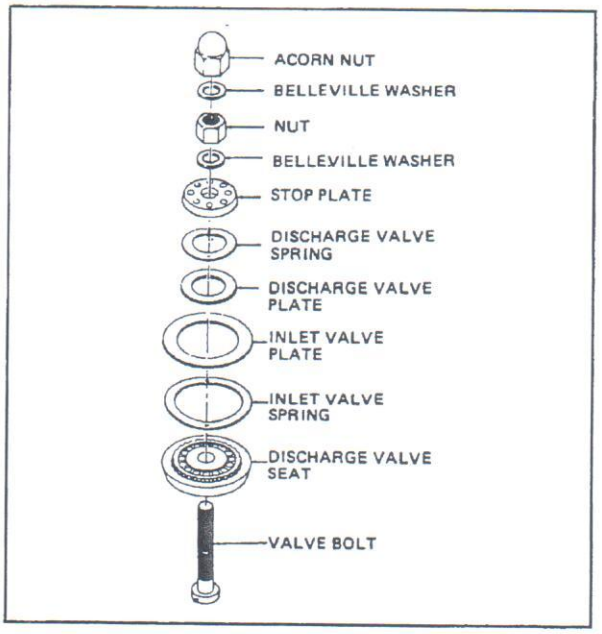

Figure 6-3. Concentric Ring-Type Valve

NOTE: Handle the valve parts with care. Do not nick, scratch or bend them.

4. The valve parts may be cleaned by light scraping or stiff bushing (do not use a wire brush.) If necessary, use a non-flammable safety solvent to loosen dirt, oil or carbon deposits.
5. Reassemble the valve parts in their proper sequence and position. Make absolutely certain that the stop-plate is centered properly on its guide; otherwise, the valve will be damaged when it is pulled up tight in the air head. Replace the valve hex nut and washer on the valve bolt. Tighten the valve hex nuts to the following torque:
   High pressure valve assembly - 65 ft. lbs. (88 Nm.) dry torque
   Low pressure valve assembly - 110 ft. lbs. (149 Nm.) dry torque
6. Before replacing the valve in the air head, scrape the old shellac off the valve bolt steel washer and coat it with new shellac to prevent air from leaking under the washer. Replace the acorn nut and tighten it to the lower limit of the torque valve, recommended below. Do not over tighten this nut, since this will distort the springs and plates, causing the valve to leak. After the valve has been replaced in the air head, make certain that the valve operates freely by lifting at its edges with a knife blade.
7. Replace the air head gaskt on the cylinder; then replace the air head. Tighten the air head capscrews to the torque recommended below and replace the unloader if the unit is so equipped.

BELT INSTALLATION AND ADJUSTMENT

When installing new belts, do not pry the belts over the pulley grooves. The proper method of removing an installing new belts is to loosen the anchor screws and the belt tightener screw, Figure 6-3, and push the motor toward the compressor. Use the tightener screw to adjust belt tension on new belts.

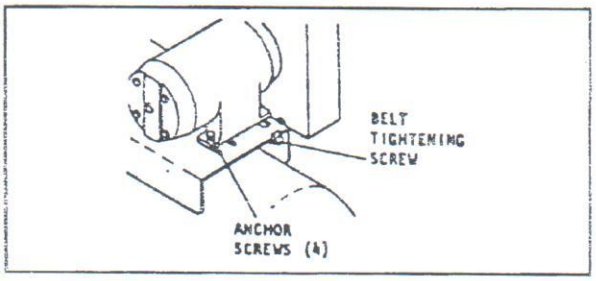

Figure 6-4. Belt Adjustments.

It is important that the belts be properly adjusted. A belt that is too loose will slip and cause heating and wear, and a belt that is too tight may overload the bearings. A quick check to determine if belt adjustment is proper may be made by observing the slack side of the belt for a slight bow when the unit is in operation. See Figure 6-5. If a slight bow is evident, belts are usually adjusted satisfactorily. However, the recommended method of checking belt tension is by the more accurate spring scale measurement method that follows:

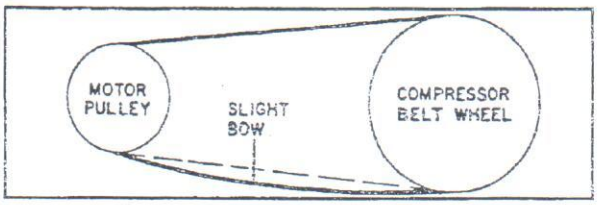

Figure 6-5. Visual Method.

A. Measure the belt span (t) as shown in Figure 6-4.

B. At the center of the span (t), apply a force (perpendicular to the span, by attaching a spring scale to the two outside belts. The force applied to the spring scale should be sufficient to deflect the belts 1/64" (.396 mm) for every inch of span length (t). For example: The deflection of 100" (2540 mm) span would be 100/64" or 1 9/16" (39.6 mm), thus, the force applied to the spring scale should deflect the belts to 1 9/16" (39.6 mm).

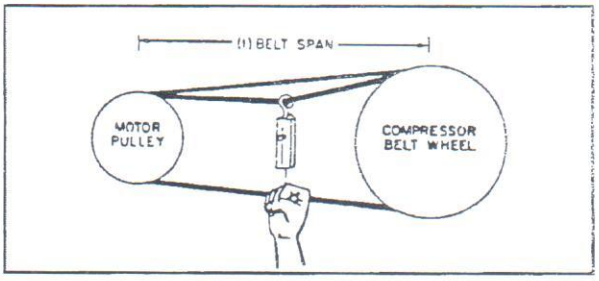

Figure 6-6. Spring Scale Method.

C. When the belts are deflected the necessary distance, compare the spring scale reading (in lbs. force) with the value given in the following table.

STANDARD BELT TENSION

Belt Type	Normal Tension	105% Normal Tension
A	1¼ lbs. (.565 kg)	1⅞ lbs. (.85 kg)
B	2¾ lbs. (1.25 kg)	4 lbs. (1.81 kg)
C	5½ lbs. (2.5 kg)	8¼ lbs. (3.74 kg)

If the reading is between the value for normal tension and 150% normal tension, the belt tension should be satisfactory. A reading below the value for normal tension indicated the belt slack should be reduced, and conversely, a reading exceeding the value for 150% normal tension indicated the belt slack should be increased. Experienced has shown that a new drive can be tightened initially to two times normal tension to allow for any drop in tension during run in.

TORQUE VALUE TABLE

NATIONAL COARSE	GRADE 2		GRADE 5		GRADE 8	
Dia. Pitch						
1/4" — 20	48 In. Lb.	5 Nm.	72 In. Lb.	8 Nm.	108 In. Lb.	12 Nm.
5/16" — 18	96 In. Lb.	11 Nm.	144 In. Lb.	16 Nm.	18 Ft. Lb.	24 Nm.
3/8" — 16	15 Ft. Lb.	20 Nm.	23 Ft. Lb.	31 Nm.	31 Ft. Lb.	42 Nm.
7/16" — 14	24 Ft. Lb.	33 Nm.	36 Ft. Lb.	49 Nm.	51 Ft. Lb.	69 Nm.
1.2" — 13	37 Ft. Lb.	50 Nm.	56 Ft. Lb.	76 Nm.	80 Ft. Lb.	108 Nm.
9/16" — 12	53 Ft. Lb.	72 Nm.	81 Ft. Lb.	110 Nm.	116 Ft. Lb.	157 Nm.
5/8" — 11	68 Ft. Lb.	92 Nm.	113 Ft. Lb.	153 Nm.	160 Ft. Lb.	217 Nm.
3/4" — 10	131 Ft. Lb.	177 Nm.	203 Ft. Lb.	275 Nm.	286 Ft. Lb.	388 Nm.

We recommend the use of a torque wrench on all bolts, capscrews, and nuts using the values in the following table. The values given are for threads lubricated with oil or grease. To determine the grade of bolt or capscrew being tightened, use the following information. Grade 2: No markings or vendor indentification on the head. Grade 5: Letter "S" or 3 lines and/or vendor identification on the head. Grade 8: Letter "V" or 6 lines and/or vendor identification on the head.

SECTION VII
OPTIONAL EQUIPMENT AND ACCESSORIES

CHECK VALVE

The check valve is not adjustable. Leaky valves can sometimes be corrected by disassembling the valve and cleaning the seating surface. If cleaning does not stop the leaking, the valve should be replaced.

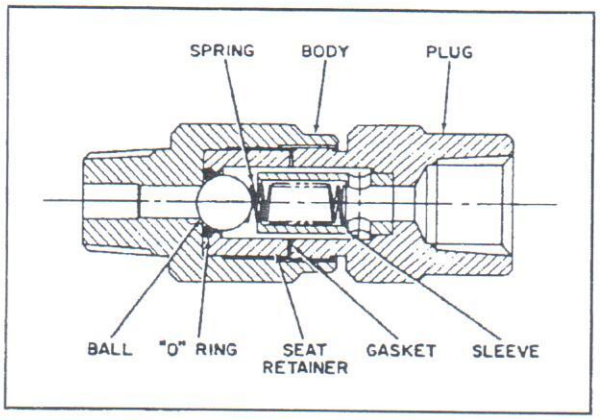

Figure 7-1. Typical Check Valve
(Furnished as optional equipment with certain models.)

AUTOMATIC CONDENSATE DRAIN VALVE

Normally, this valve should require no maintenance. However, if there is evidence of air or condensate leakage through the valve (determined by flow from the drain lines while the compressor is operating loaded), the valve piston O-rings (See Figure 7-2) may be defective, or the piston sealing surfaces on the drain valve body may be scratched or wire drawn.

VALVE DISASSEMBLY - Refer to Figure 1-4 for valve location. To disassemble the valve, refer to Figure 7-2 and proceed as follows:

1. Disconnect the electrical wiring and tubing to the automatic condensate drain valve.
2. Remove the automatic condensate drain valve from the compressor drain leg, and take to a suitable work area. NOTE: TO MAKE RE-ASSEMBLY OF THE VALVE EASIER, CAREFULLY MARK THE DIRECTION OF DIS-SSEMBLY.

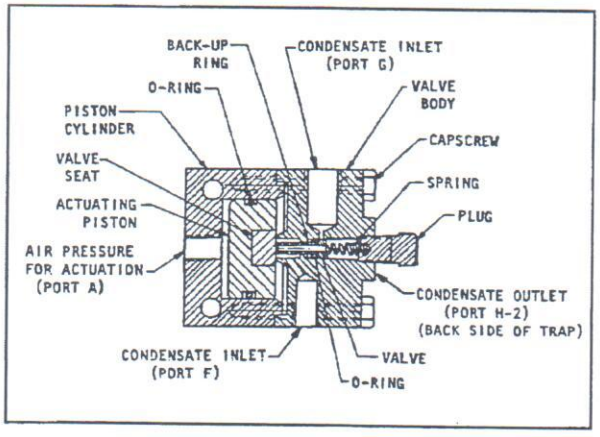

Figure 7-2. Automatic Condensate Drain Valve. (Furnished as optional equipment with certain models.)

3. Remove the capscrews holding the drain valve body and piston cylinder together. Carefully separate the pieces, and push out the actuating piston.
4. Carefully inspect the sealing surfaces of the piston and piston cylinder. If scratches or slight scoring of the sealing surfaces are present, hand lapping of these surfaces may correct the situation. If the scratches or scoring are excessive, the condensate drain valve must be replaced. NOTE: IF THE CONDENSATE DRAIN VALVE LEAKS CONTINUOUSLY, THIS MAY BE REMEDIED BY MERELY INVERTING THE VALVE SEAT. IF THE VALVE SEAT HAS BEEN INVERTED DURING A PREVIOUS OVERHAUL, THE SEAT MUST BE REPLACED.
5. Re-assemble the valve by reversing the Dis-assembly procedures.
6. Reinstall the condensate drain valve to the compressor drain leg, and reconnect all tubing and electrical wiring.

TIMED AUTOMATIC CONDENSATE DRAIN SYSTEM

Ingersoll-Rand High Pressure Air Compressors may be equipped with a timed automatic condensate drain system. This system is activated by a continuous 30 minute timer which sends an electrical signal (See Wiring Diagram on Page 21 and 22) to a three-way solenoid valve that opens and closes the automatic condensate drain valve, thus expelling the air and condensate from the compressor through the automatic condensate drain valve.

This is a required option on all high pressure air compressors whether operated Automatic Start and Stop. Constant Speed, or Dual Control mode that may be required to run more thn 30 minutes on an initial start or at any other time.

HIGH PRESSURE AIR RECEIVER

If the air system into which the compressor discharges does not have sufficient volume, the compressor will cycle too frequently. In this case, an air receiver must be used to provide enough volume to operate the regulation system of the compressor.

⚠ WARNING

This machine contains high pressure air. Can cause injury or death from flying parts.

Never operate the compressor above the maximum working pressure of the high pressure air receiver.

Air receivers must meet the requirements of the ASME BOILER AND PRESSURE VESSEL CODE, and the safety requirements of the state in which they are used.

⚠WARNING

STATEMENT CONCERNING THE USE OF THIS EQUIPMENT FOR BREATHING AIR AND/OR AQUA LUNG SERVICE.

If the model number on a compressor contains the letters "BAP"; the air compressor is suitable for breathing air services. Compressors that DO NOT bear this designation are NOT capable of producing air of breathing quality. For use in breathing air applications, an air compressor must be fitted with additional specialized equipment to properly filter and/or purify the air to meet all applicable federal, state and local laws, rules, regulations and codes, such as, but not limited to, OSHA 29 CFR 1910.34. Compressed Gas Association Commodity Specifications G-7.1-1966. Grade D Breathing Air, and/or Canadian Standards Association. Should the Purchaser and/or User fail to add such specialized equipment, and proceed to use the air compressor for breathing air service, the Purchaser/User assumes all liability resulting therefrom without any responsibility or liability being assumed by Ingersoll-Rand Company.

The purchaser is urged to include the above provisions in any agreement for any resale of this compressor.

⚠ADVERTENCIA

DOCUMENTO CONCERNIENTE AL USO DE ESTE EQUIPO PARA EL SERVICIO DE AIRE RESPIRABLE Y/O SERVICIO DE BUCEO.

Si el número del modelo en un compresor de aire contiene las letras BAP, el compresor esta diseñado para el uso en servicios de aire respirable. En la ausencia de tal designación, el compresor no puede ser considerado adecuado para producir aire respirable. Para que un compresor sea adecuado para ser usado en aplicaciones de aire respirable, debe estar acondicionado con equipo especializado para filtrar y/o purificar apropiadamente el aire y así cumplir con las leyes, reglas y regulaciones federales, locales y estatales, no limitadas a OSHA 29 CFR 1910.34, las Especificaciones de la Asociación de Gas Comprimido G-7.1-1966 Aire respirable Grado D, y/o Asociación de Estándares Canadienses. Si el comprador y/o el usuario no añaden este equipo especializado y procede a usar el compresor para servicio de aire respirable, el Comprador/Usuario asume toda la responsabilidad resultante de esto sen que ninguna responsabilidad u obligación sea asumida por la compañía Ingersoll-Rand.

Se sugiere al comprador que incluya la anterior provisión en cualquier acuerdo por cualquier re-venta de este compresor.

Hazardous vapors. Can cause severe nausea, fainting or death.

Compressed air or gas from this compressor may contain poisonous vapors or gases.

Certain sprayed material such as paints, insecticides, weed killer, sand, etc., may be harmful if inhaled or used in a closed area.

Never directly inhale the compressed air or gas produced by this compressor.

Always read container labels when spraying paints or poisons.

Always use the compressor in a well-ventilated area.

Use a respirator or mask whenever there is a chance that you might inhale any sprayed material. If a mask is used, read all instructions provided with the mask to ensure it will protect you from the materials you are spraying.

Vapores peligrosos. Pueden causar náusea, desmayo o muerte.

El aire comprimido de este compresor puede contener monóxido de carbono venenoso.

Ciertos materiales propulsados por aire tales como pinturas, insecticidas, arena etc. pueden ser peligrosos si se inhalan o utilizan en un área cerrada.

Nunca inhale directamente el aire comprimido producido por este compresor.

Lea siempre las etiquetas de los contenedores cuando esté rociando pintura o venenos.

Siempre utilice el compresor en un área bien ventilada.

Utilice el respirador o máscara cuando haya riesgo de inhalar cualquier material que esté rociando. Si utiliza máscara, lea muy bien las instrucciones para que usted pueda saber de qué lo va a proteger mientras rocía.

Hazardous voltage. Can cause severe injury or death.

Always disconnect the power supply cord before performing any maintenance or repair work.

Always connect the power supply cord to a grounded electrical receptacle with the specified voltage and fuse protection.

Never use the compressor in rain, in a wet area, or near an explosive environment.

Voltaje peligroso. Puede causar heridas severas o muerte.

Siempre desconecte el suministro eléctrico antes de hacer cualquier mantenimiento o reparación.

Siempre conecte el suministro eléctrico a un circuito adecuado y con el voltaje especificado.

Nunca utilice el compresor en la lluvia, o en un área cerca de una atmósfera explosiva.

Flammable vapors. Can cause a fire or explosion, and result in severe injury or death.

Sparks from the motor's electrical contacts can ignite flammable vapors from gasoline, natural gas or solvents.

Do not operate the compressor in any areas where explosive or flammable vapors or liquids may exist.

Never smoke or use open flame in the vicinity of the compressor or any gas bottle or source.

Vapores inflamables. Pueden causar fuego o una explosión, y el resultado puede ser herida severa o muerte.

Chispas del motor eléctrico pueden encender vapores inflamables de gasolina, gas natural o solventes.

No operan el compresor en ningunas áreas donde vapores o los líquidosexplosivos o combustibles pueden existir.

Nunca fumar o el uso abre llama en la vecindad del compresor, botella de gas o fuente de gas.

Compressed air/gas has great force.

Over-pressurizing the bottle, tank or receiver, or using a receiver which does not meet the design limits for this compressor, can cause them to rupture or explode, and result in severe injury or death.

Changes to the bottle, tank or receiver structure will cause it to weaken and can cause it to rupture or explode, and result in severe injury or death.

Internal rusting in the bottle, tank or receiver will cause it to weaken and can cause it to rupture or explode, and result in severe injury or death.

Pressure beyond design limits can cause the bottle, tank or receiver to rupture or explode, and result in severe injury or death.

Improper use of air tools or attachments can cause an explosion, and result in severe injury or death.

The bottle, tank or receiver is equipped with a relief valve to protect against over-pressurization. DO NOT REMOVE, ADJUST OR MAKE SUBSTITUTIONS FOR THE RELIEF VALVE. Periodically pull the ring on the relief valve to ensure it operates freely. If the valve is stuck or does not operate freely, it must be replaced.

Never drill into, weld to, or alter the bottle, tank or receiver in any manner.

Drain water/condensate from the air receiver daily or before each use.

Pressure switch and unloader valve operation is related to motor/engine horsepower, air receiver rating, and relief valve setting. DO NOT ATTEMPT TO ADJUST, REMOVE OR BYPASS THE PRESSURE SWITCH, OR CHANGE OR MODIFY ANY PRESSURE CONTROL RELATED DEVICE.

Do not use any air tools or air attachments without first determining the maximum air pressure recommended for that particular piece of equipment.

Compressed natural gas compressors are equipped with explosion-proof electrical systems. Ensure any additional electrical equipment is also explosion-proof.

Gas leaks can occur in compressed natural gas compressors or associated piping. Even small leaks pose a potential hazard and should be corrected before the compressor is operated. If a maintenance function involves breaking a gas-tight joint, always recheck for gas leaks after reassembling by using a commercial gas leak detector.

El aire comprimido tiene gran fuerza.

El tanque de aire sobre-presurizado puede causar que el tanque de aire explote o se rompa, y puede resultar en heridas severas o muerte.

Cambios en la estructura del tanque de aire pueden causar que el tanque de aire se debilite causando la ruptura o explosión de este, resultando en herida severa o muerte.

El debilitamiento de la estructura del tanque de aire debido a oxidación interna puede causar rupturas o explosión del tanque y puede resultar en heridas severas o muerte.

La presión de aire fuera de sus límites puede causar que el tanque explote o se rompa, y esto causaría heridas severas o muerte.

El uso impropio de las herramientas neumáticas o sus accesorios pueden causar explosión, y resultar en heridas severas.

El tanque de aire está protegido de sobrepresurización por una válvula de seguridad. NO QUITE, HAGA AJUSTES, O SUSTITUCIONES EN ESTA VALVULA. Ocasionalmente hale el anillo en la válvula de seguridad para asegurarse de que la válvula funcione libremente. Si la válvula está atascada o no funciona, debe ser reemplazada.

Nunca perfore, suelde o cambie el tanque de aire en ninguna forma.

Drene el agua/condensado del tanque de aire diariamente o antes de cada uso.

NO TRATE DE AJUSTAR, REMOVER, O DERIVAR EL BOTON DEL INTERRUPTOR DE PRESION, O CAMBIE Y MODIFIQUE CUALQUIER ESTRUCTURA RELACIONADA CON EL CONTROL DE PRESION.

No utilice ninguna herramienta neumática o accesorio sin determinar la presión máxima de aire comprimido que se recomienda para esa herramienta en particular.

Los compresors comprimidos de gas natural se equipan con sistemas eléctricos que no estallarán. Asegure cualquier equipo eléctrico adicional es también incapaz de estallar.

Los escapes de gas pueden ocurrir en los compresors naturales de gas o asociados tubos. Cualquier escape es un peligro potencial y debería corregirse antes de el compresor se opera. Si una función de mantenimiento involucra quitando un sujetador, siempre detecta cualquier gas escapa después de armar nuevamente por usar un detector de escape de gas.

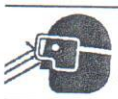

Rotating compressor. Can propel dirt, sand, metal shavings, etc., and result in severe injury.

Never point an air nozzle or air sprayer toward any part of the body, or toward another person.

Always wear safety glasses or goggles when servicing.

Aire comprimido. Puede expulsar polvo, metal o arena etc. y puede resultar en heridas.

Nunca apunte la boquilla hacia alguna parte del cuerpo o hacia otra persona.

Use siempre gafas protectoras.

Moving parts. Can cause severe injury.

Always disconnect the power supply before attempting to perform any maintenance or repair work.

Always ensure the pressure is released from the compressor, bottles, tanks, receiver and air attachments before performing any maintenance or repair work.

Always disconnect the power supply on electric motor models if the compressor is to be left unattended.

Never operate compressor with the fan shroud removed, or if the shroud is damaged or broken.

Las partes en movimiento pueden causar heridas severas.

Desconecte siempre el suministro eléctrico antes de cualquier mantenimiento ó reparación.

Desconecte siempre el suministro eléctrico si el compresor no va ser usado.

Asegúrese que el aire a presión es liberado del compresor, del tanque de aire, y demás accesorios de aire antes de hacer cualquier mantenimiento o reparación.

Nunca opere el compresor sin el guarda poleas. Nunca opere el compresor con una polea dañada o rota.

Hot parts. Compressors get hot while running, and can cause severe burns if touched.

Never touch the compressor, motor/engine, or tubing during or shortly after compressor operation.

Partes calientes. Los compresores de aire se calientan en operación y pueden causar quemaduras severas.

Nunca toque el compresor, el motor, o la tubería de descarga durante o poco después de operar el compresor.

Look What INGERSOLL-RAND *Can Do For YOU. . .*

Vea Lo Que INGERSOLL-RAND *Puede Hacer Por USTED. . .*

EFFICIENT FIELD SERVICE

We maintain a highly trained staff of technicians to service your equipment for preventive maintenance, or to assist you should emergencies ever occur.

EFICIENTE SERVICO EN EL CAMPO

Mantenemos un grupo de mecánicos entrenados para suministrarle mantenimiento preventivo o atender cualquier emergencia que puede tener.

COMPLETE REPAIR SERVICE

Our trained technicians will repair or overhaul your equipment to factory specifications, using only genuine I-R parts.

COMPLETO SERVICIO DE REPARACION

Mecánicos entrenados repararán su compresor según los métodos recomendados por fábrica usando solamente partes genuinas Ingersoll-Rand.

SPECIAL ENGINEERING SERVICE

We can help you identify and solve your compressed air problems by evaluating your needs and recommending the proper compressor and air piping system to give you maximum efficiency.

SERVICO DE INGENIERIA ESPECIAL

Nosotros podemos ayudarlo con sus problemas de aire comprimido investigando sus necesidades y recomendando el compresor y el sistema de aire adecuados para lograr máxima eficiencia.

SPARE PARTS

By stocking genuine I-R spare parts, we can help you avoid costly delays, or substituting inferior parts. Using genuine I-R parts on your I-R equipment will help to keep even older machines running in good-as-new condition.

PARTES DE REPUESTO

Mantenemos partes genuinas Ingersoll- Rand, evitando posibles sobrecostos debido a demoras en la sustitución de partes menores. Como resultado, los equipos antiguos son mantenidos como nuevos.

COMPLETE STOCK OF EQUIPMENT

We carry a complete line of I-R equipment and accessories designed to met any compressed air application. We are backed by Ingersoll-Rand's prompt factory shipment to ensure you on-time delivery.

STOCK COMPLETO DE EQUIPOS

Nuestro stock de máquinas completas que pueden encargarse usualmente de cualquier necesidad, está soportado por un eficiente sistema de despachos de fábrica de Ingersoll-Rand para asegurarle entrega a tiempo.

A SUBSTITUTE IS NOT A REPLACEMENT

Ensure you get peak performance and longevity out of your Ingersoll-Rand compressor by insisting on genuine Ingersoll-Rand replacement parts and maintenance kits. Not only are the replacement parts made to precise dimensions and OEM-specified metallurgy, but each part is backed by the Ingersoll-Rand warranty. Your local Air Center, Full-Service distributor or direct Ingersoll-Rand salesperson will work with you to ensure you get the parts you need to do the job right. Equip your machines with only the best - Ingersoll-Rand Genuine Parts.

UN SUSTITUO NO ES UN REEMPLAZO

Asegúrese que obtiene máximo desempeño y duración de su compresor insistiendo en usar solamente partes de reemplazo genuinas y kits de mantenimiento Ingersoll-Rand. No solamente están construidas con dimensiones precisas y especificaciones exactas de metalurgia, sino que cada parte está respaldada por la garantía Ingersoll-Rand. Su Air Center, su Distribuidor de Servicio o el personal de ventas directo de Ingersoll-Rand trabajarán con Usted para asegurarle que recibe las partes para efectuar el trabajo correcto. Equipe sus máquinas sólo con lo mejor - Partes Genuinas Ingersoll-Rand.

DISTRIBUTED BY:
DISTRIBUIDO POR:

Ingersoll-Rand Company
Reciprocating Compressor Division
Small Compressor Business Unit
Campbellsville, KY 42718

Printed in the U.S.A.

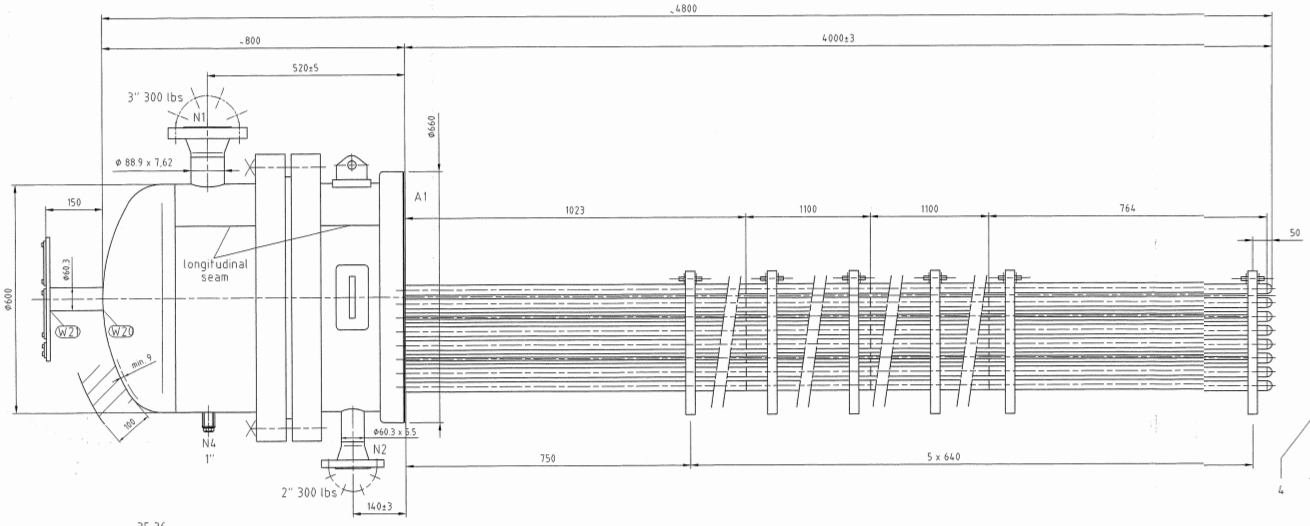

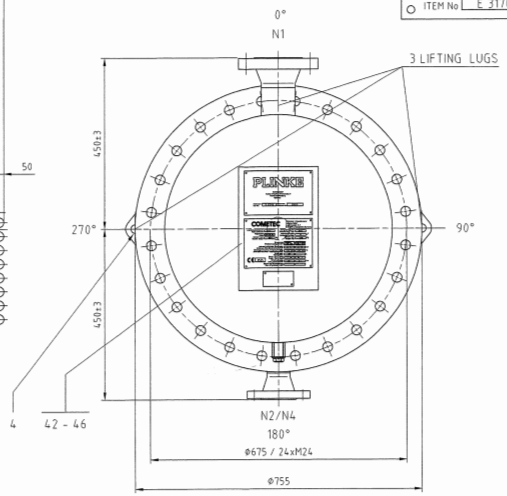

Chematur Engineering
Sweden
ITEM No E 31704

PLINKE

PLINKE GmbH
Kaiser-Friedrich-Promenade 24
61348 Bad Homburg
Germany

Positionsnr.: Item No.: E 31704
Referenznr.: Reference No.: 11940

180

COMETEC

Hersteller / Manufacturer
Cometec GmbH
Lagerhausstr. 7-9
D-63589 Linsengericht/Germany

Fabrikationsnummer: Fabrication No:	7332	Herstellungsjahr: Manufacture Year:	2004
Regelwerk: Code:	ASME VIII Div. 1	Austauschfläche: Exchange surface	24 m²
Gewicht leer: Weight empty:	1005 Kg	Gewicht voll: Weight full:	1290 Kg

Druckraum: Pressure Compartment:		ROHRRAUM TUBE SIDE	MANTELRAUM SHELL SIDE
maximal zulässiger Druck: maximum allowable pressure:	PS	-1 / 21	-1 / 2,8 bar
Zulässige min./max. Temperatur: allowable min./max. temperature:	TS	-10 / 220	-10 / 200 °C
Inhalt: Volume:	V	285	L
Fluid / Kat / Fluid Fluid / Cat / Fluid		2 / IV	2
Prüfdruck: test pressure:	PT	32,6	5,4 bar
Datum der Druckprüfung Date of pressure test:			

CE 0525

Behälter gemäß Richtlinie über Druckgeräte 97/23/EG
Vessel according Pressure Equipment Directive 97/23/EC

ASME Job No. 11.43.83

Installation, Aufstellung und Betrieb nur nach beigefügter Betriebsanleitung
Installation and operation in compliance with enclosed operation manual
Die Eignung der Werkstoffe nach beigefügter Stückliste
Material requisition according to enclosed List of parts

Technische Betriebsdaten / technical specification

		Rohrraum tube side	Mantelraum shell side
PS	maximal zulässiger Druck maximum allowable pressure	-1 / 21 bar	-1 / 2,8 bar
TS	Zulässige min./max. Temperatur allowable min./max. temperature	-10° / 220°C	-10° / 200°C
	Test pressure	32,6 bar	5,4 bar
V	Inhalt / volume	285 l	
	Fluide Art. 9-2	group 2	group 2
	Kategorie / category	IV	
	Modul	G	
	Design Code	ASME Code Section VIII Div.1, Edition 2001 Addenda 2003, T.E.M.A. "B"	
	Gewicht / weight	empty 1005 kg	full 1290 kg
	Austauschfläche / exchange surface	24 m²	
	Korrosionszuschlag / corrosion allowance	Stahl / CS = 1,6 mm Tantal / tantalum = 0.8 mm	
	Mechanische Beanspruchung wie nach UG-22, jedoch nur UG-22(a) interner und externer Druck gültig Loading as per UG-22 considered, but only UG-22(a) internal and external pressure applied		
	Entwurfsprüfung / design approval	Benannte Stelle / Kunde / notified body / customer	
	Schlussprüfung und Druckprüfung final inspection and pressure test	Benannte Stelle / notified body	

Prüfungen / examinations

Prüfintervalle: Nach Regeln des Aufstellungslandes.
Inspection intervals: According rules of state of installation

Kerbschlagprüfung / Charpy Impact Test	entfällt nach / exempted by UG-20, UCS-66(a)
Röntgenprüfung Radiographs RT	W1, W2 Längsnaht/Longitudinal seam: spot W19 Rundnaht / Circumferential seam: spot
Helium Dichtheitsprüfung helium leak test	Tantalschweißnähte / tantalum seams W200 - W275, W276 - W351, W352 - W355 W356 - W389
FE - Prüfung dye penetration test	Tantalschweißnähte / tantalum seams W200 - W275, W276 - W351, W352 - W355 W356 - W389, W390 - W465
Druckprobe (Medium Wasser) pressure test (fluid water)	Rohrraum / tube side 32,6 bar max. 20°C

Schweißangabe / welding

Schweißnähte dürfen nur von Schweißern mit gültiger Prüfbescheinigung nach DIN EN 287 und EN ISO 9606 T5 ausgeführt werden. Nicht bemaßte Schweißnähte werden nach EN 1708-1 vorbereitet.
Weldings shall be made only by qualified welders with examination according EN 287 and ISO 9606 T5. Edge preparation and edge forms for welding according EN 1708-1

Schweißnahtwertigkeit Stahl V = 0.85 / Welding joint efficiency CS V = 0.85

Wärmebehandlung / Heat treatment: nicht erforderlich / not required

Material materials	Lage layer	Verfahren procedure	Elektrodentyp type of electrode	Hersteller manufacturer
Ta / Ta	alle	WIG / GTAW	without filler	
Stahl / CS	Wurzel / root	WIG / GTAW	OE-MO (ER 80 S-G)	Oerlikon
Stahl / CS	Füll / fill	Elektrode / SMAW	Spezial (E 7016)	Oerlikon
Stahl / CS	Deck / top			Oerlikon

Oberflächenbehandlung nach den Prüfungen surface treatment after the tests	Entrosten nach ISO 8501-1 SA 2,5 und 2 - fache Grundierung der Stahlteile mit Zink-Ethylsilikat-farbe Mindesdicke 60-80 µm derusting according ISO 8501-1 SA 2,5 and double undercoating of nonlined the steelparts by zink - ethylsi. primer min.thickness 60-80 µm

Plinke Auftr. 11940-10/A001
Pos. Nr.: 11940E31704
Plinke Zeichn.Nr. 0B32161 A
Vorprüfvermerke / Approval and Release

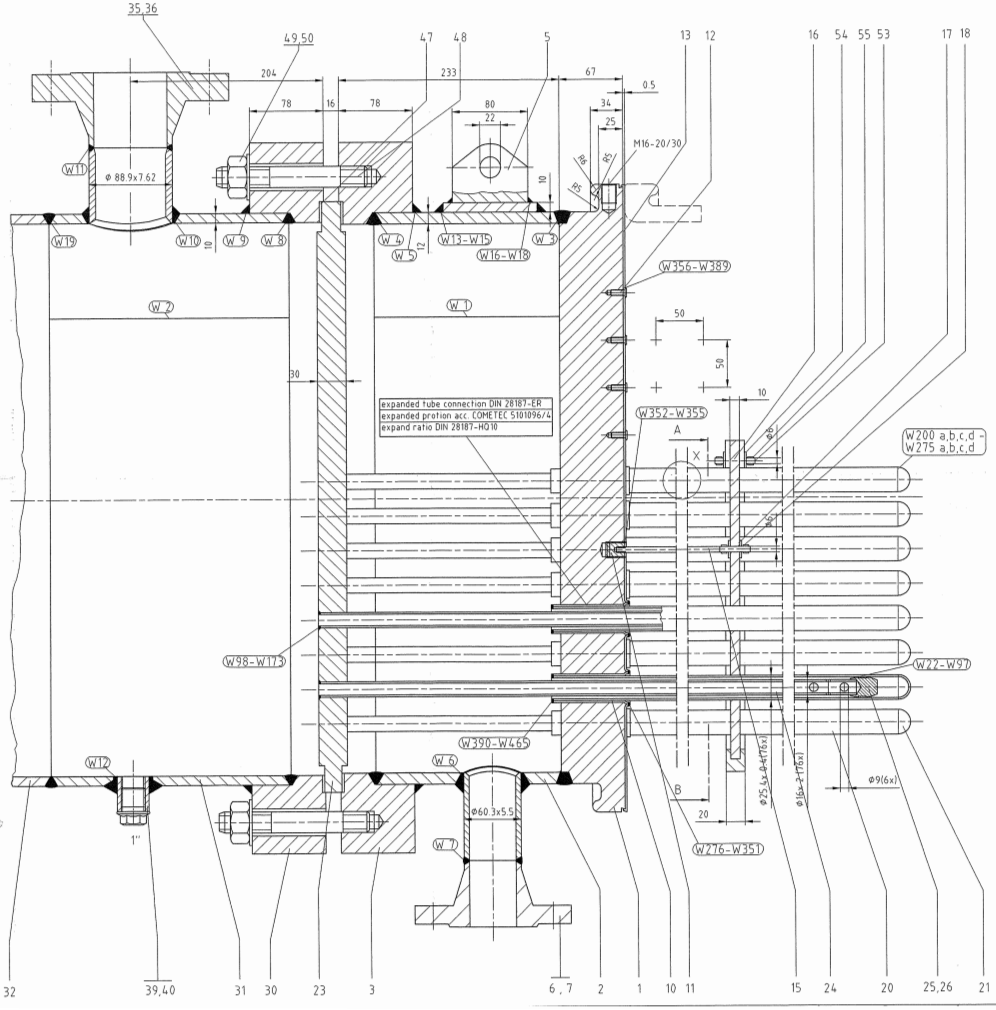

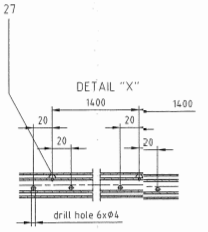

The glass-lined vessel manufacturer had determinate the radius of baffle supports and the distance center line baffles to baffle support grounds.

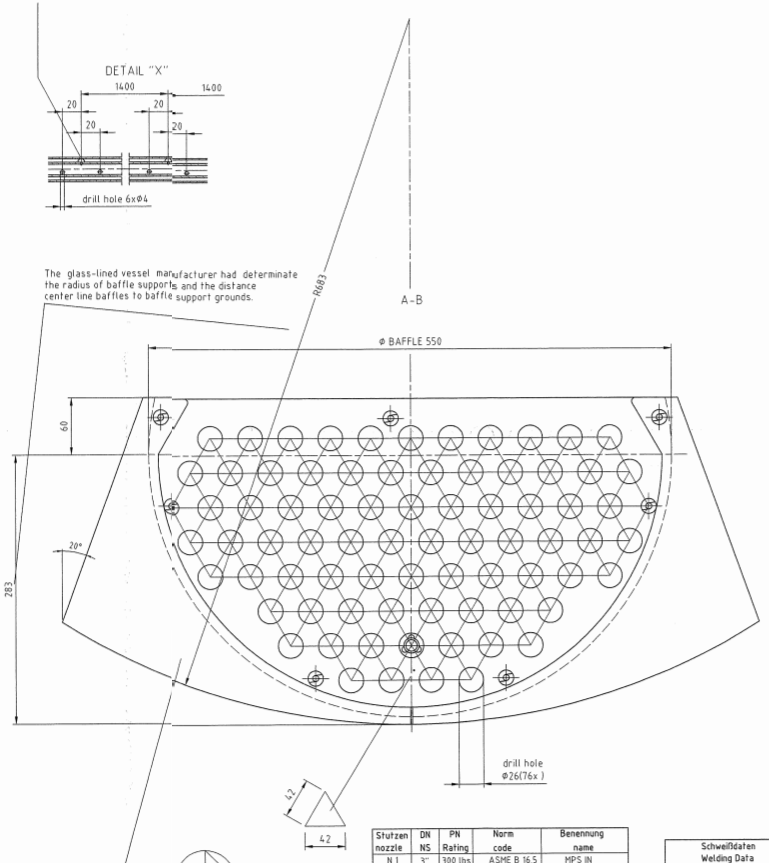

Stutzen nozzle	DN NS	PN Rating	Norm code	Benennung name
N 1	3"	300 lbs	ASME B 16.5	MPS IN
N 2	2"	300 lbs	ASME B 16.5	LPC OUT
A 1	24"	CLAMPS		V31704
N 4	G 1"			DRAIN (BLIND)

Schweißdaten Welding Data	
Welding No.	WPS No.
W 1 - W 173	A 20
W200 - W 465	A 13

COMETEC

				Oberfläche	Maßstab 1:5(1:2)	Massen -	Mengr. -
					Material -	Stückliste Nr. 10464	
				Datum Name	Benennung STRIPPING HEATER E 31704		
				Bearb. 19.03.2004 Kr Graber			
				Gepr. 19.04.04 Kr Graber			
				Norm			
03	Tu. Änderungsantrag gem.	12.08.2004	Kr Graber	Die Weitergabe sowie Vervielfältigung dieser Unterlage, auch auszugsweise, sowie deren Verwertung und Mitteilung ihres Inhalts sind ohne ausdrückliche Genehmigung der COMETEC GmbH nicht gestattet. Copyright by COMETEC GmbH	Zeichnungs-Nr. 5103309/0		Blatt 1
02	Zeichnungsänderung	19.05.2004	Kr Graber				
01	Zeichnungsänderung	03.05.2004	Kr Graber				

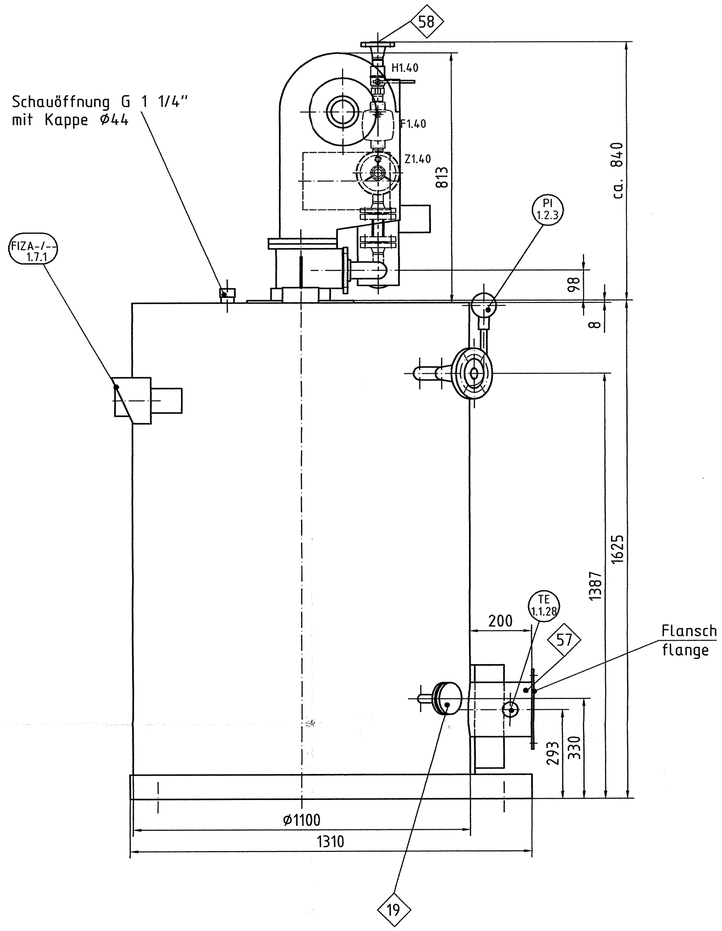

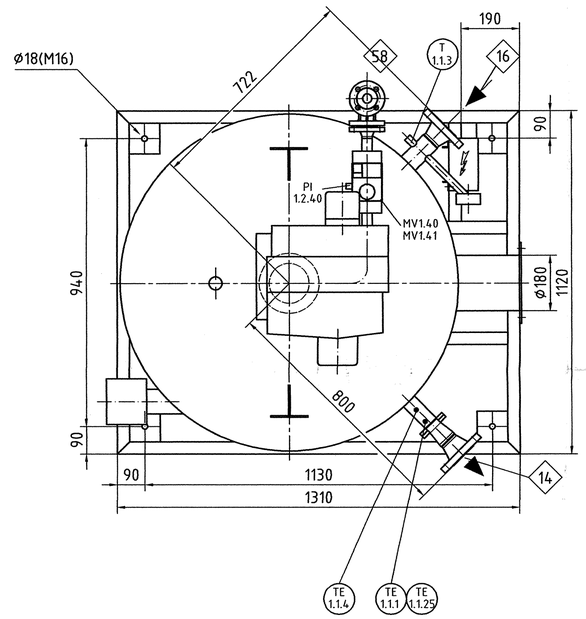

ANZAHL: 2 STCK.

WÄRMETRÄGERMEDIUM: Marlotherm SH

ZUL. MAX. TEMPERATUR (TS): 300 °C

MAX. ZULÄSSIGER DRUCK (PS): 10 bar_0

GEWICHT:
LEERGEWICHT: ca. 900 kg
BETRIEBSGEWICHT: ca. 1060 kg

INHALT:
WÄRMETRÄGER: 155 Liter

ELEKTROTECHNISCHE DATEN:
BETRIEBS-SPANNUNG: 400 Volt
STEUER-SPANNUNG: 110 Volt
FREQUENZ: 50 Hz

SCHALTSCHRANK:
ABMESSUNGEN: L: 600 mm
B: 260 mm
H: 1095 mm

KLEMMENKASTEN:
ABMESSUNGEN: L: 340 mm
B: 95 mm
H: 170 mm

quantity: 2 pc.

heat transfer fluid: Marlotherm SH

admissable max. temperature (TS): 300 °C

max. admissable pressure (PS): 10 bar_0

weight:
empty weight: ca. 900 kg
operation weight: ca. 1060 kg

content:
heat transfer fluid: 155 l

electrotechnical data:
operation voltage: 400 Volt
control voltage: 110 Volt
frequency: 50 Hz

switch board:
dimensions: l: 600 mm
w: 260 mm
h: 1095 mm

connection box:
dimensions: l: 340 mm
w: 95 mm
h: 170 mm

14-VORLAUF-ERHITZER ASME 2", 300lbs, RF

16-RÜCKLAUF-ERHITZER ASME 2", 300lbs, RF

19-ENTLEERANSCHLUSS ASME 3/4", 300lbs, RF

57-RAUCHGASANSCHLUSS-STUTZEN ø180

58-ERDGASANSCHLUSS ASME 1", 150lbs, RF

WARTUNGSRAUM
CA.800mm UMLAUFEND

HEIZRAUM-HINWEISE
-NACH LANDESBAUORDNUNG
-BE- UND ENTLÜFTUNGSÖFFNUNGEN VORSEHEN
-ABMESSUNGEN UND AUSFÜHRUNG DER WÄNDE, DECKEN UND FUSSBODEN BEACHTEN
-FEUERLÖSCHER UND GEFAHRENSCHALTER AUSSERHALB DES GEFAHRENBEREICHS ANORDNEN

INNENAUFSTELLUNG

FARBANSTRICH:
TEMPERATUR-BEAUFSCHLAGTE TEILE: silberfarbig
RAHMEN/BLECHE: RAL 7000 struktur
SCHALTSCHRANK: RAL 6021 struktur
VA-/VERZINKTE TEILE: ohne

14-heater in flow ASME 2", 300lbs, RF

16-heater return flow ASME 2", 300lbs, RF

19-emptying connection ASME 3/4", 300lbs, RF

57-flue gas connection ø180

58-natural gas connection ASME 1", 150lbs, RF

maintenance space
on all sides appr. 800mm

heating room recommendations
-according to building regulations
-sufficent ventilation must be possible
-dimensions and design of walls, roof and floor has to be noticed
-fire extinguisher and main switch outside the dangerous area

internal assembly

finish:

heated parts: silver
frame/sheetmetal: RAL 7000 structured
switch board: RAL 6021 structured
stainless steel/galv.parts: without

NORMEN UND VERORDNUNGEN
BEI AUFSTELLUNG UND BETRIEB VON WÄRME-ÜBERTRAGUNGSANLAGEN SIND ZU BEACHTEN:
-DRUCKGERÄTERICHTLINIE
-TRB 801
-GERÄTESICHERHEITSGESETZ (GSG)
-BETRIEBSSICHERHEITSVERORDNUNG (BETRSICHV)
-WASSERHAUSHALTSGESETZ
-ZTA HEIZRÄUME
-UVV BGV D3
-DIN 4754 (WÄRMEÜBERTRAGUNGSANLAGEN)
-VDI 3033
-VDE VORSCHRIFTEN

ROHRLEITUNGSINSTALLATION
-ROHRLEITUNGEN SIND SPANNUNGSFREI ANZUSCHLIESSEN
-LÄNGENDEHNUNG DER ROHRLEITUNGEN DURCH KOMPENSATOREN, SCHLÄUCHE, BOGEN ETC. AUSGLEICHEN
-ENTLÜFTUNGSARMATUREN VORSEHEN
-SCHWEISSVERBINDUNGEN NACH EN 287 UND DIN EN 12732
-WERKSTOFFE NACH DIN4754
-WÄRMEDÄMMUNG AUS NICHT BRENNBAREM MATERIAL VORSEHEN

standards and regulations
installation and operation of heat transfer plants according to:
-pressure equipment directive
-TRB 801
-appliance safety law (GSG)
-operating safety regulation (BetrSichV)
-water protection decree
-ZTA heating rooms
-UVV BGV D3
-DIN 4754 (German Standard "heat transfer plants")
-VDI 3033
-VDE regulations

pipe installation
-pipelines has to be mounted without stress
-pipe elongation has to be equalized by compensators, bellows, flexible pipes etc.
-pipe venting has to be intended
-welded connection according to EN 287 and DIN EN 12732
-materials according to DIN4754
-thermal insulation in non-inflammable materials

Optionen:

GEGENFLANSCHE:	ohne		counter flanges:	excl.	
AUFFANGWANNE:	ohne		drain pan:	excl.	
ABMESSUNGEN:	L:	mm	dimensions:	l:	mm
	B:	mm		w:	mm
	H:	mm		h:	mm
SERVICESCHALTER:	ohne		service switch:	excl.	
LECKAGE-WARNGERÄT:	ohne		leak alarm device:	excl.	

TOLERANZEN IN WERKSTATTGERECHTER AUSFÜHRUNG NACH EN ISO 13920

ÄNDERUNGEN VORBEHALTEN!

shop finished tolerances according to european standard EN ISO 13920

subject to change!

Nr./No	Art der Änderung/Kind of modification	Datum/Date	Name	Gepr.
E	as built	21.09.04	Gru.	Ve.

Nr./No	Art der Änderung/Kind of modification	Datum/Date	Name	Gepr.
A	Rev., Kennzeichnung	12.07.04	Gru.	Ve.
B	Freigabe	20.07.04	Gru.	Ve.
C	Farbanstrich	21.07.04	Gru.	Ve.
D	Inspection status	08.09.04	go	Ve.

	Datum/Date	Name
Gez./Drawn.	21.06.2004	Gruber
Gepr./Checked	12.07.2004	Ve.

HTT energy systems Postfach 1922 D-32009 Herford Fon: ++49(0)5221 385-0
Fax: ++49(0)5221 385-12 Internet: www.htt.de e-mail: info@htt.de

Auftrag/Order	1 04 0385 - 0389 0
Kunde/Customer	Fa. List AG
Projekt/Project	8010014-3/4473

Benennung/Designation
Wärmeträgerölerhitzer
wtö 300-30-1-v
Gas fired heater
X37414A/R

=	Maßstab/Scale	Rev.	Zeichnungs-Nr./Drawing-No.
+	1:10	E	7 04 0572/1
Blatt/Page:			Ersatz für/Replacement for:
von/of:			

HTT energy systems

Prüfbericht für befeuerte Erhitzer wtö

checklist for fired heaters wtö

HTT energy systems

Komm.-Nr. / comm. No. 1.04.0385.0	**Kunde /** customer LIST

Erhitzer / *heater*	**Manometer /** *pressure gauge*
Type / type WTÖ 300-30-1-V	
Baujahr / year build 2004	Rücklauf / return 0 – 16 bar
Fabr.-Nr. / serial number 8.1.3032	Vorlauf / inflow bar
Leistung / capacity 300 kW	
mind. Vol.-Strom / min. flow rate 15,4 m³/h	
Umwälzpumpe I / *circulation pump*	**Motor /** *motor*
Hersteller / manufacturer STERLING	Hersteller / manufacturer SIEMENS
Type / type CBED050315/300CF6EA1B2P	Type / type 1LA7133 4AA66-Z
Fabr.-Nr. / serial number LU0212603601	Fabr.-Nr. / serial number 0407/388661 01 0021
Q 17,5 m³/h H 30 mFls n 1450 1/min	U 400 V f 50 Hz I 15,2 A P 7,5 kW
Manometer Drucks. / gauge pressure side 0 – 10 bar	n 1455 1/min cos φ 0,82
Manometer Saugs. / gauge suction side -1 – 3 bar	Bereich MSS / range MCCB 11 – 16 A
Umwälzpumpe II / *circulation pump*	**Motor /** *motor*
Hersteller / manufacturer	Hersteller / manufacturer
Type / type	Type / type
Fabr.-Nr. / serial number	Fabr.-Nr. / serial number
Q m³/h H mFls n 1/min	U V f Hz I A P kW
Manometer Drucks. / gauge pressure side bar	n 1/min cos φ
Manometer Saugs. / gauge suction side bar	Bereich MSS / range MCCB A
Brenner / *burner*	**Motor /** *motor*
Hersteller / manufacturer WEISHAUPT	Hersteller / manufacturer WEISHAUPT
Type / type G3/1-E	Type / type D90/50-2
Fabr.-Nr. / serial number 5401403	Fabr.-Nr. / serial number 4696002
Leistung / power 80 – 550 kW	U 400 V f 50 Hz I 2,1 A P 0,76 kW
Düsengröße / nozzle size St1 US Gal. °	n 2800 1/min cos φ 0,85
Düsengröße / nozzle size St2 US Gal. °	Bereich MSS / range MCCB 1,8 – 2,5 A
Befüllpumpe / *filling pump*	**Motor /** *motor*
Hersteller / manufacturer SPECK	Hersteller / manufacturer AC-MOTOREN
Type / type SK3301LX0034C13	Type / type AF90L-4
Fabr.-Nr. / serial number 166994	Fabr.-Nr. / serial number 1532/18906
Q m³/h H mFls n 1/min	U 380-420 V f 50 Hz I 3,6 A P 1,5 kW
	n 1410 1/min cos φ 0,79
	Bereich MSS / range MCCB 2,8 – 4 A
Ausdehnungsbehälter / *expansion vessel*	
Type / type ADB 1500-1-1-H	Sicherheitsventil / safety valve 9 bar
Baujahr / year build 2004	Ölmangelschalter / lack of oel switch ☒ J / yes ☐ N / no
Fabr.-Nr. / serial number 8.4.3340	Niveauschalter / high limit switch ☐ J / yes ☒ N / no
Inhalt / content 1500 l	Niveauschalter / low limit switch ☐ J / yes ☒ N / no
Sammelbehälter / *drain tank*	
Type / type SAB 5000-1-1-H	Sicherheitsventil / safety valve 1 bar
Baujahr / year build 2004	
Fabr.-Nr. / serial number 8.5.1044	Niveauschalter / high limit switch ☒ J / yes ☐ N / no
Inhalt / content 5000 l	Niveauschalter / low limit switch ☐ J / yes ☒ N / no

HTT energy systems GmbH
Postfach 1922 · D-32009 Herford
Füllenbruchstr. 183 · D-32051 Herford
Telefon: ++ 49 (0) 52 21 / 3 85 - 0
Telefax: ++ 49 (0) 52 21 / 3 85 - 12
Internet: www.htt.de · E-Mail: info@htt.de
Sparkasse Herford (BLZ 494 501 20) Kto. 47 092
Dresdner Bank AG Herford (BLZ 480 800 20) Kto. 3 814 154
Commerzbank AG Herford (BLZ 494 400 43) Kto. 2 518 900
GmbH, Sitz Herford, HRB 3428
Geschäftsführer: Harald Peterson
Dr.-Ing. Dietmar Hunold

Prüfbericht für befeuerte Erhitzer wtö

checklist for fired heaters wtö

HTT energy systems

Komm.-Nr. / comm. No. 1.04.0385.0	**Kunde** / customer LIST

Übertemp. Sicherung / *safety temperature limiter*

Vorlauf / *inflow*

Type / type	STB-R-230
Anzahl / number	1
Fabr.-Nr. / serial number	405463.01.023
eingestellt auf / adjust on	300 °C
PT 100 Typ / type	WF5/B
Type / type	
Anzahl / number	
Fabr.-Nr. / serial number	
eingestellt auf / adjust on	°C
PT 100 Typ / type	

Übertemp. Sicherung / *safety temperature limiter*

Rauchgas / *flue gas*

Type / type	STB-R-230
Anzahl / number	1
Fabr.-Nr. / serial number	405463.01.024
eingestellt auf / adjust on	400 °C
PT 100 Typ / type	WF7
Type / type	
Anzahl / number	
Fabr.-Nr. / serial number	
eingestellt auf / adjust on	°C
PT 100 Typ / type	

Temp.Schalter / *temperature switch*

Type / type	STB-R-230
Anzahl / number	1
Fabr.-Nr. / serial number	405463.01.032
eingestellt auf / adjust on	100 °C
PT 100 Typ / type	WF5/A
Type / type	
Anzahl / number	
Fabr.-Nr. / serial number	
eingestellt auf / adjust on	°C
PT 100 Typ / type	

Stickstoffüberlagerung / *nitrogen cover*

Sicherheitsdruckschalter / safety pressure limiter	SDBAM1
eingestellt auf / adjust on	0,4↑ bar
Druckschalter / pressure switch	(2X) DCM1
eingestellt auf / adjust on	0,2↓/0,8↑ bar
Einlass- / Auslassventil / supply valve and drain valve	
Steuerspannung / control voltage	24 V ☐ AC ☒ DC

Strömungswächter / *flow control*

Type / type	21D015
Anzahl / number	1
eingestellt auf / adjust on	0,1/0,28 bar
Type / type	
Anzahl / number	
eingestellt auf / adjust on	bar

Temperaturregler / *temp. Controller*

Type / type	32701-99sdh-u1/930451
Fabr.-Nr. / serial number	R204 34085
PT 100 Typ VL / type inflow	WF5/B
PT 100 Typ RL / type reflow	

Brennersteuergerät / *burner controller*

Type / type	LFL 1.322-110V
Umlaufzeit / *cycle time* tv	36 s
U 100-110 V	f 50-60 Hz

Betriebsspannung / *voltage*

Leistungsspannung / power voltage	400 V 3 PH 50 Hz
Steuerspannung / control voltage	110 V ☒ AC ☐ DC
Steuerspannung / control voltage	V ☐ AC ☐ DC

Checkliste / *check list*

☒ **Schaltschrank** / *control box* ☐ **Klemmenkasten** / *terminal box*

Sicherheitskette / safety circuit	geprüft / checked	☒ Ja / yes	☐ Nein / no
Einstellung Motorschutzschalter / adjust circuit-breaker	geprüft / checked	☒ Ja / yes	☐ Nein / no
Funktionsprüfung / function checkout	geprüft / checked	☒ Ja / yes	☐ Nein / no
Temperaturregler / temperature controller	eingestellt / adjust	☒ Ja / yes	☐ Nein / no
Schutzleitersystem / protective-conductor system	geprüft / checked	☒ Ja / yes	☐ Nein / no
Durchflußrichtung der Ventile / flow direction of the valves	geprüft / checked	☒ Ja / yes	☐ Nein / no
Typenschild Schaltschrank / control box type designation plate	vorhanden / existing	☒ Ja / yes	☐ Nein / no

Bemerkungen / *remarks*

04.10.2004
Datum / *date*

Hermann
Unterschrift / *signature*

HTT energy systems GmbH
Postfach 1922 · D-32009 Herford
Füllenbruchstr. 183 · D-32051 Herford
Telefon: ++ 49 (0) 52 21 / 3 85 - 0
Telefax: ++ 49 (0) 52 21 / 3 85 - 12
Internet: www.htt.de · E-Mail: info@htt.de
Sparkasse Herford (BLZ 494 501 20) Kto. 47 092
Dresdner Bank AG Herford (BLZ 480 800 20) Kto. 3 814 154
Commerzbank AG Herford (BLZ 494 400 43) Kto. 2 518 900
GmbH, Sitz Herford, HRB 3428
Geschäftsführer: Harald Peterson
Dr.-Ing. Dietmar Hunold

Prüfbericht für befeuerte Erhitzer wtö

checklist for fired heaters wtö

HTT energy systems

Komm.-Nr. / comm. No. 1.04.0386.0	**Kunde** / customer LIST

Erhitzer / *heater*		**Manometer** / *pressure gauge*	
Type / type	WTÖ 300-30-1-V		
Baujahr / year build	2004	Rücklauf / return	0 – 16 bar
Fabr.-Nr. / serial number	8.1.3033	Vorlauf / inflow	bar
Leistung / capacity	300 kW		
mind. Vol.-Strom / min. flow rate	15,4 m³/h		

Umwälzpumpe I / *circulation pump*		**Motor** / *motor*	
Hersteller / manufacturer	STERLING	Hersteller / manufacturer	SIEMENS
Type / type	CBED050315/300CF6EA1B2P	Type / type	1LA7133 4AA66-Z
Fabr.-Nr. / serial number	LU0212603602	Fabr.-Nr. / serial number	0407/388661 01002
Q 17,5 m³/h | H 30 mFls | n 1450 1/min		U 400 V | f 50 Hz | I 15,2 A | P 7,5 kW	
Manometer Drucks. / gauge pressure side	0-10 bar	n 1455 1/min | cos φ 0,82	
Manometer Saugs. / gauge suction side	-1-3 bar	Bereich MSS / range MCCB	11-16 A

Umwälzpumpe II / *circulation pump*		**Motor** / *motor*	
Hersteller / manufacturer		Hersteller / manufacturer	
Type / type		Type / type	
Fabr.-Nr. / serial number		Fabr.-Nr. / serial number	
Q m³/h | H mFls | n 1/min		U V | f Hz | I A | P kW	
Manometer Drucks. / gauge pressure side	bar	n 1/min | cos φ	
Manometer Saugs. / gauge suction side	bar	Bereich MSS / range MCCB	A

Brenner / *burner*		**Motor** / *motor*	
Hersteller / manufacturer	WEISHAUPT	Hersteller / manufacturer	WEISHAUPT
Type / type	G3/1-E	Type / type	D90/50-2
Fabr.-Nr. / serial number	5401404	Fabr.-Nr. / serial number	4696010
Leistung / power	80 – 550 kW	U 400 V | f 50 Hz | I 2,1 A | P 0,76 kW	
Düsengröße / nozzle size St1	US Gal. °	n 2800 1/min | cos φ 0,85	
Düsengröße / nozzle size St2	US Gal. °	Bereich MSS / range MCCB	1,8 – 2,5 A

Befüllpumpe / *filling pump*		**Motor** / *motor*	
Hersteller / manufacturer		Hersteller / manufacturer	
Type / type		Type / type	
Fabr.-Nr. / serial number		Fabr.-Nr. / serial number	
Q m³/h | H mFls | n 1/min		U V | f Hz | I A | P kW	
		n 1/min | cos φ	
		Bereich MSS / range MCCB	A

Ausdehnungsbehälter / *expansion vessel*			
Type / type		Sicherheitsventil / safety valve	bar
Baujahr / year build		Ölmangelschalter / lack of oel switch	☐ J / yes ☐ N / no
Fabr.-Nr. / serial number		Niveauschalter / high limit switch	☐ J / yes ☐ N / no
Inhalt / content	l	Niveauschalter / low limit switch	☐ J / yes ☐ N / no

Sammelbehälter / *drain tank*			
Type / type		Sicherheitsventil / safety valve	bar
Baujahr / year build			
Fabr.-Nr. / serial number		Niveauschalter / high limit switch	☐ J / yes ☐ N / no
Inhalt / content	l	Niveauschalter / low limit switch	☐ J / yes ☐ N / no

HTT energy systems GmbH
Postfach 1922 · D-32009 Herford
Füllenbruchstr. 183 · D-32051 Herford
Telefon: ++ 49 (0) 52 21 / 3 85 - 0
Telefax: ++ 49 (0) 52 21 / 3 85 - 12
Internet: www.htt.de · E-Mail: info@htt.de
Sparkasse Herford (BLZ 494 501 20) Kto. 47 092
Dresdner Bank AG Herford (BLZ 480 800 20) Kto. 3 814 154
Commerzbank AG Herford (BLZ 494 400 43) Kto. 2 518 900
GmbH, Sitz Herford, HRB 3428
Geschäftsführer: Harald Peterson
Dr.-Ing. Dietmar Hunold

Prüfbericht für befeuerte Erhitzer wtö

checklist for fired heaters wtö

HTT energy systems

Komm.-Nr. / comm. No. 1.04.0386.0	**Kunde /** customer LIST

Übertemp. Sicherung / *safety temperature limiter*		**Übertemp. Sicherung /** *safety temperature limiter*	
Vorlauf / *inflow*		**Rauchgas /** *flue gas*	
Type / type STB-R 230	Anzahl / number 1	Type / type STB-R 230	Anzahl / number 1
Fabr.-Nr. / serial number 405463.01.025		Fabr.-Nr. / serial number 405463.01.020	
eingestellt auf / adjust on	300 °C	eingestellt auf / adjust on	400 °C
PT 100 Typ / type WF5/B		PT 100 Typ / type WF7	
Type / type	Anzahl / number	Type / type	Anzahl / number
Fabr.-Nr. / serial number		Fabr.-Nr. / serial number	
eingestellt auf / adjust on	°C	eingestellt auf / adjust on	°C
PT 100 Typ / type		PT 100 Typ / type	

Temp.Schalter / *temperature switch*		**Stickstoffüberlagerung /** *nitrogen cover*
Type / type STB-R-230	Anzahl / number 1	Sicherheitsdruckschalter / safety pressure limiter
Fabr.-Nr. / serial number 405463.01.030		eingestellt auf / adjust on bar
eingestellt auf / adjust on	100 °C	Druckschalter / pressure switch
PT 100 Typ / type WF5/A		eingestellt auf / adjust on bar
Type / type	Anzahl / number	
Fabr.-Nr. / serial number		Einlass- / Auslassventil / supply valve and drain valve
eingestellt auf / adjust on	°C	Steuerspannung / control voltage V ☐ AC ☐ DC
PT 100 Typ / type		

Strömungswächter / *flow control*		**Temperaturregler /** *temp. Controller*
Type / type 21D015	Anzahl / number	Type / type 92701-99sdh-u1/930 HS1
eingestellt auf / adjust on 0,1/0,28	bar	Fabr.-Nr. / serial number R204 34084
Type / type	Anzahl / number	PT 100 Typ VL / type inflow WF5/B
eingestellt auf / adjust on	bar	PT 100 Typ RL / type reflow

Brennersteuergerät / *burner controller*	**Betriebsspannung /** *voltage*
Type / type LFL 1.322-110V	Leistungsspannung / power voltage 400 V 3 PH 50 Hz
Umlaufzeit / *cycle time* tv 36 s	
U 100-110 V f 50-60 Hz	Steuerspannung / control voltage 110 V ☒ AC ☐ DC
	Steuerspannung / control voltage V ☐ AC ☐ DC

Checkliste / *check list*

☒ **Schaltschrank /** *control box*	☐ **Klemmenkasten /** *terminal box*		
Sicherheitskette / safety circuit	geprüft / checked	☒ Ja / yes	☐ Nein / no
Einstellung Motorschutzschalter / adjust circuit-breaker	geprüft / checked	☒ Ja / yes	☐ Nein / no
Funktionsprüfung / function checkout	geprüft / checked	☒ Ja / yes	☐ Nein / no
Temperaturregler / temperature controller	eingestellt / adjust	☒ Ja / yes	☐ Nein / no
Schutzleitersystem / protective-conductor system	geprüft / checked	☒ Ja / yes	☐ Nein / no
Durchflußrichtung der Ventile / flow direction of the valves	geprüft / checked	☒ Ja / yes	☐ Nein / no
Typenschild Schaltschrank / control box type designation plate	vorhanden / existing	☒ Ja / yes	☐ Nein / no

Bemerkungen / *remarks*

04.10.2004
Datum / *date*

Hermann
Unterschrift / *signature*

HTT energy systems GmbH
Postfach 1922 · D-32009 Herford
Füllenbruchstr. 183 · D-32051 Herford
Telefon: ++ 49 (0) 52 21 / 3 85 - 0
Telefax: ++ 49 (0) 52 21 / 3 85 - 12
Internet: www.htt.de · E-Mail: info@htt.de
Sparkasse Herford (BLZ 494 501 20) Kto. 47 092
Dresdner Bank AG Herford (BLZ 480 800 20) Kto. 3 814 154
Commerzbank AG Herford (BLZ 494 400 43) Kto. 2 518 900
GmbH, Sitz Herford, HRB 3428
Geschäftsführer: Harald Peterson
Dr.-Ing. Dietmar Hunold

Regler Parameterliste

Regler Typ:	92701-99sdh-u1/930H51 (2X)
Fabr.-Nr.:	R204 34085 + R204 34084
HTT-Kom.:	1.04.0385 + 0386.0
Kunde:	LIST
Anlage:	2X WTÖ 300-30-1-V

Sollwert-einstellung	Werks-einstellung	nach Inbetriebnahme	Bemerkung
SP	0		

> 5 sec. Parameter-Ebene 1	Werks-einstellung	nach Inbetriebnahme	Bemerkung
P	10		
I	2		
d	0		
Sh	0,1		
SA 3	5,0		
Sd 3	3,0		

Parameter-Ebene 2	Werks-einstellung	nach Inbetriebnahme	Bemerkung
Unit	°C		
Lo / Hi	0 / 300		
dSPL	SP		

Konfigurations-Ebene	Werks-einstellung	nach Inbetriebnahme	Bemerkung
Code	1		
Conf	701		
Ist 1/2	0/0		
y "	42		
out	in		
y - S	rel 2		
rel 3	So		
-"-	Ist 1		
-"-	Si A		

Prüfbericht für Sekundärkreise ra-p

checklist for secondary circuit ra-p

HTT energy systems

Komm.-Nr. / comm. No. 1.04.0387.0	**Kunde** / customer LIST

Anlage Type / *unit type* RA-P 65-130.50-125-K

Umwälzpumpe / *circulation pump*	**Motor** / *motor*
Hersteller / manufacturer STERLING	Hersteller / manufacturer ATB
Type / type CBED 08200/208CF6EF1B24	Type / type CD 200L2-2
Fabr.-Nr. / serial number LV021259 4401	Fabr.-Nr. / serial number 440656001
Q 130 m³/h H 50 mFls n 2900 1/min	U 400 V f 50 Hz I 57 A P 33 kW
Manometer Drucks. / gauge pressure side 0 – 10 bar	n 2960 1/min cos φ 0,9
Manometer Saugs. / gauge suction side 0 – 6 bar	Bereich MSS / range MCCB 45 – 63 A

Regelventil Heizen / *control valve heating*	**Regelventil Kühlen** / *control valve cooling*
Type / type 361406c/390846xn	Type / type 362412d/390846xn
Fabr.-Nr. / serial number V2043128	Fabr.-Nr. / serial number V2043129
Antrieb / drive [X] pneum. [ ] U V Hz	Antrieb / drive [X] pneum. [ ] U V Hz
Signal / signal [X] mA [ ] V 4 – 20 = 0-100 %	Signal / signal [X] mA [ ] V 4 – 20 = 0-100 %
Energielos / lacking energy AB-A [X] zu/ close [ ] auf/ open	Energielos / lacking energy AB-A [X] zu/ close [ ] auf/ open
Endschalter / limit switch [ ] Ja / yes [X] Nein / no	Endschalter / limit switch [ ] Ja / yes [X] Nein / no
Druckschalter / pressure switch [ ] Ja / yes [X] Nein / no	Druckschalter / pressure switch [X] Ja / yes [ ] Nein / no

Kühler / *cooler type*	**Übertemp. Sicherung** / *safety temperature limiter*
Type / type WTG 219-30-2/1-G	**Vorlauf** / *inflow*
Baujahr / year build 2004	Type / type Anzahl / number
	Fabr.-Nr. / serial number
Fabr.-Nr. / serial number 8.3.3449	eingestellt auf / adjust on °C
Leistung / capacity 250 kW	**Temperaturregler** / *temp. Controller*
Rohrsystem / piping system max 10 bar bei 0-100 °C	Type / type 92810e-991r-99bwam-0yx-41
Behälter / vessel, shell max 10 bar bei -10-300 °C	Fabr.-Nr. / serial number R20434091
Kühlwasserventil / *cooling water valve*	PT 100 Typ VL / type inflow WF5/C
Steuerspannung / control voltage V [ ] AC [ ] DC	PT 100 Typ RL / type reflow

Strömungswächter	**Betriebsspannung** / *voltage*
TYP: 21D015	Leistungsspannung / power voltage 400 V 3 PH 50 Hz
eingestellt auf: 0,03 bar	Steuerspannung / control voltage 110 V [X] AC [ ] DC
	Steuerspannung / control voltage 24 V [ ] AC [X] DC

Checkliste / *check list*

[ ] **Schaltschrank** / *control box*	[ ] **Klemmenkasten** / *terminal box*		
Einstellung Motorschutzschalter / adjust circuit-breaker	geprüft / checked	[X] Ja / yes	[ ] Nein / no
Funktionsprüfung / function checkout	geprüft / checked	[X] Ja / yes	[ ] Nein / no
Temperaturregler / temperature controller	eingestellt / adjust	[X] Ja / yes	[ ] Nein / no
Schutzleitersystem / protective-conductor system	geprüft / checked	[X] Ja / yes	[ ] Nein / no
Durchflußrichtung der Ventile / flow direction of the valves	geprüft / checked	[X] Ja / yes	[ ] Nein / no
Typenschild Schaltschrank / control box type designation plate	vorhanden / existing	[X] Ja / yes	[ ] Nein / no

Bemerkungen / *remarks*

- MOTOR Nr. 2 WIE OBEN Fb Nr.: 440656002 / PUMPE Nr. 2 WIE OBEN Fb. Nr.: LV021259 4402
- Kühlwasserregelventil TYP: 321408d / Antrieb: 24VDC-PN / Fb. Nr.: V2043126

04.10.2004
Datum / *date*

Unterschrift / *signature*

HTT energy systems GmbH Postfach 1922 · D-32009 Herford
Telefon: ++ 49 (0) 52 21 / 3 85 - 0 Telefax: ++ 49 (0) 52 21 / 3 85 - 12
Sparkasse Herford (BLZ 494 501 20) Kto. 47 092
Dresdner Bank AG Herford (BLZ 480 800 20) Kto. 3 814 154
GmbH, Sitz Herford, HRB 3428
Geschäftsführer: Harald Peterson
Dr. Ing. Dietmar Hunold

Prüfbericht für Sekundärkreise ra-p

checklist for secondary circuit ra-p

HTT energy systems

Komm.-Nr. / comm. No. 1.04.0388.0	**Kunde** / customer LIST

Anlage Type / *unit type* RA-P 20-12.40-40-K

Umwälzpumpe / *circulation pump*	**Motor** / *motor*
Hersteller / manufacturer STERLING	Hersteller / manufacturer ATB
Type / type CBED 032200/184CF2EZ1B20	Type / type CD 132 S2-2
Fabr.-Nr. / serial number LV0212610101	Fabr.-Nr. / serial number 440655001
Q 12 m³/h H 40 mFls n 2900 1/min	U 400 V f 50 Hz I 13,4 A P 7,0 kW
Manometer Drucks. / gauge pressure side 0-10 bar	n 2930 1/min cos φ 0,86
Manometer Saugs. / gauge suction side 0-6 bar	Bereich MSS / range MCCB 11-16 A

Regelventil Heizen / *control valve heating*	**Regelventil Kühlen** / *control valve cooling*
Type / type 361401/390846xn	Type / type 361404/390846xn
Fabr.-Nr. / serial number V2043130	Fabr.-Nr. / serial number V2043131
Antrieb / drive [X] pneum. [ ] U V Hz	Antrieb / drive [X] pneum. [ ] U V Hz
Signal / signal [X] mA [ ] V 4-20 = 0-100 %	Signal / signal [X] mA [ ] V 4-20 = 0-100 %
Energielos / lacking energy AB-A [X] zu/ close [ ] auf/ open	Energielos / lacking energy AB-A [X] zu/ close [ ] auf/ open
Endschalter / limit switch [ ] Ja / yes [X] Nein / no	Endschalter / limit switch [ ] Ja / yes [X] Nein / no
Druckschalter / pressure switch [ ] Ja / yes [X] Nein / no	Druckschalter / pressure switch [X] Ja / yes [ ] Nein / no

Kühler / *cooler type*	**Übertemp. Sicherung** / *safety temperature limiter*
Type / type WTG 159-6-2/1-G	**Vorlauf** / *inflow*
Baujahr / year build 2004	Type / type Anzahl / number
	Fabr.-Nr. / serial number
Fabr.-Nr. / serial number 8.3.3448	eingestellt auf / adjust on °C
Leistung / capacity 23 kW	**Temperaturregler** / *temp. Controller*
Rohrsystem / piping system max 10 bar bei 0-100 °C	Type / type 92810e-991r-99bwam-04x-U1
Behälter / vessel, shell max 10 bar bei -10-300 °C	Fabr.-Nr. / serial number R20434090
Kühlwasserventil / *cooling water valve*	PT 100 Typ VL / type inflow WF5/C
Steuerspannung / control voltage 24 V [ ] AC [X] DC	PT 100 Typ RL / type reflow

	Betriebsspannung / *voltage*
Strömungswächter	Leistungsspannung / power voltage 400 V 3 PH 50 Hz
TYP: 21D015	Steuerspannung / control voltage 24 V [ ] AC [X] DC
eingestellt auf: 0,03	Steuerspannung / control voltage 110 V [X] AC [ ] DC

Checkliste / *check list*

[X] **Schaltschrank** / *control box*	[ ] **Klemmenkasten** / *terminal box*		
Einstellung Motorschutzschalter / adjust circuit-breaker	geprüft / checked	[X] Ja / yes	[ ] Nein / no
Funktionsprüfung / function checkout	geprüft / checked	[X] Ja / yes	[ ] Nein / no
Temperaturregler / temperature controller	eingestellt / adjust	[X] Ja / yes	[ ] Nein / no
Schutzleitersystem / protective-conductor system	geprüft / checked	[X] Ja / yes	[ ] Nein / no
Durchflußrichtung der Ventile / flow direction of the valves	geprüft / checked	[X] Ja / yes	[ ] Nein / no
Typenschild Schaltschrank / control box type designation plate	vorhanden / existing	[X] Ja / yes	[ ] Nein / no

Bemerkungen / *remarks*

- MOTOR Nr. 2 WIE OBEN Fb Nr.: 440655002 / PUMPE Nr. 2 WIE OBEN Fb Nr. LV0212610102

04.10.2004
Datum / *date*

Hermann
Unterschrift / *signature*

HTT energy systems GmbH
Postfach 1922 · D-32009 Herford
Telefon: ++49 (0) 52 21 / 3 85 - 0
Telefax: ++49 (0) 52 21 / 3 85 - 12
Sparkasse Herford (BLZ 494 501 20) Kto. 47 092
Dresdner Bank AG Herford (BLZ 480 800 20) Kto. 3 814 154
GmbH, Sitz Herford, HRB 3428
Geschäftsführer: Harald Peterson
Dr.-Ing. Dietmar Hunold

Prüfbericht für Sekundärkreise ra-p

checklist for secondary circuit ra-p

energy systems

Komm.-Nr. / comm. No. 1.04.0389.0	**Kunde** / customer LIST

Anlage Type / *unit type* RA-P 15-4.20-25 K

Umwälzpumpe / *circulation pump*	**Motor** / *motor*
Hersteller / manufacturer STERLING	Hersteller / manufacturer ATB
Type / type CBED040315/277CF6EB1B2N	Type / type CD 132 S-4
Fabr.-Nr. / serial number LU021260 5901	Fabr.-Nr. / serial number 440654001
Q 4 m³/h H 25 mFls n 1450 1/min	U 400 V f 50 Hz I 9,9 A P 5,0 kW
Manometer Drucks. / gauge pressure side bar	n 1450 1/min cos φ 0,85
Manometer Saugs. / gauge suction side bar	Bereich MSS / range MCCB 9 - 12,5 A

Regelventil Heizen / *control valve heating*	**Regelventil Kühlen** / *control valve cooling*
Type / type 361400/390846xn	Type / type 361402/390846xn
Fabr.-Nr. / serial number V2043132	Fabr.-Nr. / serial number V2043133
Antrieb / drive ☒ pneum. ☐ U V Hz	Antrieb / drive ☒ pneum. ☐ U V Hz
Signal / signal ☒ mA ☐ V 4-20 = 0-100 %	Signal / signal ☒ mA ☐ V 4-20 = 0-100 %
Energielos / lacking energy AB-A ☒ zu/ close ☐ auf/ open	Energielos / lacking energy AB-A ☒ zu/ close ☐ auf/ open
Endschalter / limit switch ☐ Ja / yes ☒ Nein / no	Endschalter / limit switch ☐ Ja / yes ☒ Nein / no
Druckschalter / pressure switch ☒ Ja / yes ☒ Nein / no	Druckschalter / pressure switch ☒ Ja / yes ☐ Nein / no

Kühler / *cooler type*	**Übertemp. Sicherung** / *safety temperature limiter*
Type / type	**Vorlauf** / *inflow*
Baujahr / year build	Type / type Anzahl / number
	Fabr.-Nr. / serial number
Fabr.-Nr. / serial number 8.3.3448	eingestellt auf / adjust on °C
Leistung / capacity kW	**Temperaturregler** / *temp. Controller*
Rohrsystem / piping system max bar bei °C	Type / type 92810e-991r-99bwam-0qx-41
Behälter / vessel, shell max bar bei °C	Fabr.-Nr. / serial number 12204 34092
Kühlwasserventil / *cooling water valve*	PT 100 Typ VL / type inflow WF5/C
Steuerspannung / control voltage 24 V ☐ AC ☒ DC	PT 100 Typ RL / type reflow

	Betriebsspannung / *voltage*
	Leistungsspannung / power voltage 400 V 3 PH 50 Hz
	Steuerspannung / control voltage 24 V ☐ AC ☒ DC
	Steuerspannung / control voltage 110 V ☒ AC ☐ DC

Checkliste / *check list*

☒ **Schaltschrank** / *control box*		☐ **Klemmenkasten** / *terminal box*	
Einstellung Motorschutzschalter / adjust circuit-breaker	geprüft / checked	☒ Ja / yes	☐ Nein / no
Funktionsprüfung / function checkout	geprüft / checked	☒ Ja / yes	☐ Nein / no
Temperaturregler / temperature controller	eingestellt / adjust	☒ Ja / yes	☐ Nein / no
Schutzleitersystem / protective-conductor system	geprüft / checked	☒ Ja / yes	☐ Nein / no
Durchflußrichtung der Ventile / flow direction of the valves	geprüft / checked	☒ Ja / yes	☐ Nein / no
Typenschild Schaltschrank / control box type designation plate	vorhanden / existing	☒ Ja / yes	☐ Nein / no

Bemerkungen / *remarks*

04.10.2004
Datum / *date*

Hermann
Unterschrift / *signature*

HTT energy systems GmbH Postfach 1922 · D-32009 Herford
Telefon: ++ 49 (0) 52 21 / 3 85 - 0 Telefax: ++ 49 (0) 52 21 / 3 85 - 12
Sparkasse Herford (BLZ 494 501 20) Kto. 47 092
Dresdner Bank AG Herford (BLZ 480 800 20) Kto. 3 814 154
GmbH, Sitz Herford, HRB 3428
Geschäftsführer: Harald Peterson
Dr.-Ing. Dietmar Hunold

Regler Parameterliste

Regler Typ:	92810e-991r-99bwam-04x-41 (3X)
Fabr.-Nr.:	R20434091 / R20434090 / R20434092
HTT-Kom.:	1.04.0387-9.0
Kunde:	LIST
Anlage:	RA-P 65-130.50-125-K / RA-P 20-12.40-40-K / RA-P 15-4.25-25-K

P Sollwert-einstellung	Werks-einstellung	nach Inbetriebnahme	Bemerkung
SP	0		
SPE	0		
SP-F	SP		

P > 5 sec Parameter-Ebene 1	Werks-einstellung	nach Inbetriebnahme	Bemerkung
P 1	10		
I 1	2		
d 1	0		
P 2	10		
I 2	2		
d 2	0		

P ▼ Parameter-Ebene 2	Werks-einstellung	nach Inbetriebnahme	Bemerkung
1bLo / 1bHi	0 / 300		
ELo / EHi	0 / 300		
SLo / SHi	0 / 300		
1nSt	0		
Lo / Hi	0 / 300		
Gr	0,0		
dSPL	SP		

P ▲ Konfigurations-Ebene	Werks-einstellung	nach Inbetriebnahme	Bemerkung
Code	1		
Ist 1	0,0		
A in 1	4 - 20		
A in 2	4 - 20		
SPE	ABS		
out	4-20		
out	In In		
td	0,0		
Sout	4 - 20		
Y - S	0		
rF 1	2,0		
rF 2	40,0		
Adr	5		

Prüfbericht Umwälzpumpen
checklist circulation pumps

HTT energy systems

Komm.-Nr. / comm. No. 1.04.0385-0389-0	Kunde / customer LIST

Anlage Type / *unit type*

Umwälzpumpe / *circulation pump*	Motor / *motor*
Hersteller / manufacturer STERLING	Hersteller / manufacturer SIEMENS
Type / type CBED050315CF6EB1B25	Type / type 1LA7163 4AA66-Z
Fabr.-Nr. / serial number LU0212604701	Fabr.-Nr. / serial number 0407/388661 02001
Q 35 m³/h H 30 mFls n 1450 1/min	U 400 V f 50 Hz I 21,5 A P 11 kW
Manometer Drucks. / gauge pressure side 0 – 6 bar	n 1460 1/min cos φ 0,84
Manometer Saugs. / gauge suction side –1 – 3 bar	Bereich MSS / range MCCB 18 - 25 A

Umwälzpumpe / *circulation pump*	Motor / *motor*
Hersteller / manufacturer STERLING	Hersteller / manufacturer SIEMENS
Type / type CBED050315CF6EB1B25	Type / type 1LA7163 4AA66-Z
Fabr.-Nr. / serial number LU0212604702	Fabr.-Nr. / serial number 0407/388661 02002
Q 35 m³/h H 30 mFls n 1450 1/min	U 400 V f 50 Hz I 21,5 A P 11 kW
Manometer Drucks. / gauge pressure side 0 – 6 bar	n 1460 1/min cos φ 0,84
Manometer Saugs. / gauge suction side –1 – 3 bar	Bereich MSS / range MCCB 18 - 25 A

Umwälzpumpe / *circulation pump*	Motor / *motor*
Hersteller / manufacturer	Hersteller / manufacturer
Type / type	Type / type
Fabr.-Nr. / serial number	Fabr.-Nr. / serial number
Q m³/h H mFls n 1/min	U V f Hz I A P kW
Manometer Drucks. / gauge pressure side bar	n 1/min cos φ
Manometer Saugs. / gauge suction side bar	Bereich MSS / range MCCB A

Umwälzpumpe / *circulation pump*	Motor / *motor*
Hersteller / manufacturer	Hersteller / manufacturer
Type / type	Type / type
Fabr.-Nr. / serial number	Fabr.-Nr. / serial number
Q m³/h H mFls n 1/min	U V f Hz I A P kW
Manometer Drucks. / gauge pressure side bar	n 1/min cos φ
Manometer Saugs. / gauge suction side bar	Bereich MSS / range MCCB A

Bemerkungen / *remarks*

- REGLER KESSELKASKADE TYP: 92200-99bwdm-0yx-u1
Fb. Nr.: R204 34089 / PT100 TYP VL: WF5/A

04.10.2004
Datum / *date*

Hermann
Unterschrift / *signature*

HTT energy systems GmbH
Postfach 1922 · D-32009 Herford
Füllenbruchstr. 183 · D-32051 Herford
Telefon: ++ 49 (0) 52 21 / 3 85 - 0
Telefax: ++ 49 (0) 52 21 / 3 85 - 12
Internet: www.htt.de · E-Mail: info@htt.de
Sparkasse Herford (BLZ 494 501 20) Kto. 47 092
Dresdner Bank AG Herford (BLZ 480 800 20) Kto. 3 814 154
Commerzbank AG Herford (BLZ 494 400 43) Kto. 2 518 900
GmbH, Sitz Herford, HRB 3428
Geschäftsführer: Harald Peterson
Dr.-Ing. Dietmar Hunold

Regler Parameterliste

Regler Typ:	92200-99bwam-0gx-u1
Fabr.-Nr.:	R204 34089
HTT-Kom.:	1.04.0385-0389.0
Kunde:	LIST
Anlage:	KASKADENREGLER

P Sollwert-einstellung	Werks-einstellung	nach Inbetriebnahme	Bemerkung
SP	0		
SPE	0		
SP-F	SP		

P > 5 sec Parameter-Ebene 1	Werks-einstellung	nach Inbetriebnahme	Bemerkung
Sd1	3,0		
SA2	5,0		
Sd2	3,0		

P ▼ Parameter-Ebene 2	Werks-einstellung	nach Inbetriebnahme	Bemerkung
Unit	°C		
ELo/EHi	0/300		
SLo/SHi	0/300		
Lo/Hi	0/300		
dSPL	SP		

P ▲ Konfigurations-Ebene	Werks-einstellung	nach Inbetriebnahme	Bemerkung
Code	1		
Ist 1/2	0/0		
A in 3	4-20		
SPE	ABS		
out	in		
Sout	4-20		
Y_S	AUS		
Adr	5		